Australian Journal of Acupuncture and Chinese Medicine

CONTENTS

2007 VOLUME 2 ISSUE 1

AACMA
AUSTRALIAN ACUPUNCTURE
& CHINESE MEDICINE
ASSOCIATION LTD
ACN 010 020 390

Australian Journal of Acupuncture and Chinese Medicine

The *Australian Journal of Acupuncture and Chinese Medicine* (AJACM) is the official journal of the Australian Acupuncture and Chinese Medicine Association Ltd (AACMA). It is Australia's only peer-reviewed journal for the acupuncture and Chinese medicine profession. All articles, other than Current Research & Clinical Applications, Conference Reports, Book Reviews and International News, have undergone the peer-review process. AJACM is indexed in the Australasian Medical Index.

Publication, design and printing
Published by the Australian Acupuncture and Chinese Medicine Association Ltd (AACMA)
ABN 52 010 020 390

Design by Blink Studio

Printed by Screen Offset Printing

Contact information
AJACM
PO Box 1635
COORPAROO DC QLD 4151
AUSTRALIA

p: +61 7 3324 2599
f: +61 7 3394 2399
e: ajacm@acupuncture.org.au
w: www.acupuncture.org.au/ajacm.cfm

For information regarding article submission, subscriptions and advertising, please see end pages.

ISSN 1833-9735

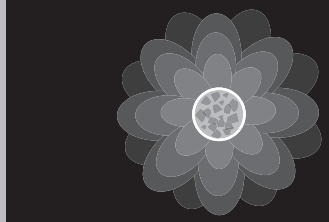

RedPeony
chinese medicine

Sugar free & high potency

Your young patients deserve the best

Addresses most common kids disorders

- ✓ No preservatives or artificial colouring
- ✓ Sugar free – sweetened with Stevia
- ✓ High strength 5:1 water soluble granules
- ✓ Suitable for children age 2-12
- ✓ Easy measuring spoon enclosed
- ✓ Child proof caps
- ✓ Practitioner only

Ask us for FREE sample product!

These granules contain approx. 90% PURE herbal (5:1) extract. The small amount of Stevia in Red Peony gives the same degree of sweetness as the 40% – 50% of white sugar that is generally used in children's Chinese herbal formulas.

SunHerbal®
Better Naturally

• KIDS COLD RELIEF • KIDS CHEST CLEAR • KIDS CALM AND EASY • KIDS DIGESTION TONIC • KIDS WELLBEING • KIDS RASH RELIEF • KIDS COOLING • KIDS DRY NIGHTS • KIDS EAR CLEAR

SunHerbal®
Better Naturally

Red Peony Kids formulas are available from the following distributors:

ACUPUNCTURE AUSTRALIA	1800 886 916	HELIO SUPPLY COMPANY	1800 026 161
ACUNEEDS AUSTRALIA	1800 678 789	INTEGRATED HEALTH SERVICES	08 8351 9762
BETTALIFE DISTRIBUTORS	1300 553 223	NATURAL REMEDIS GROUP	1300 138 815
CHINA BOOKS	1800 448 855	OBORNE HEALTH SUPPLIES	1300 887 188
CHINA BOOKS SYDNEY	1300 661 484	PAGLE WHOLESALE DISTRIBUTORS	1300 724 537
FITNESS PRODUCTS	07 3299 6411	RENER HEALTH PRODUCTS	08 9311 6810
HERBS FOR HEALTH (NZ)	0800 100 482	SUN HERBAL PTY LTD	02 9759 2927

Gi10672 AJACM

Editorial

The *Australian Journal of Acupuncture and Chinese Medicine* is entering its second year.

Early this year, we were invited to be included in the Australasian Medical Index (AMI), which indexes health and medical literature published in Australia. Titles and authors of manuscripts published in this Journal can now be accessed easily by readers in Australia via http://search.informit.com.au/search;res=MEDITEXT.

Since the publication of the first volume, we have received numerous oral and written comments. Most of them were encouraging and some were suggestions for future topics. A sample of them is published under Letters to the Editor (p. 4). In another form of feedback, we have been pleased to receive manuscripts from international researchers and authors on a wide range of topics.

There has been lively interest in the practice of evidence-based medicine and this is the prominent theme in the comments we received. Readers were intrigued by Ryan's paper,[1] published in our last volume. In this issue, we have invited Charlie Xue, Professor of Chinese Medicine at RMIT University, to discuss the application and production of evidence and their impacts on the development of Chinese medicine in Australia.

This year, for the first time, the Australian Government has allocated an extra five million dollars to the National Health and Medical Research Council (NHMRC) in order to support and encourage research for evidence in complementary medicine. This historical decision will impact upon the use and practice of complementary medicine as primary medicine or adjunctive therapies in Australia. This initiative was based on models of research funding from the United States of America. The National Center for Complementary and Alternative Medicine was established in 1999 in the USA. Since then, the funding allocated to complementary and alternative medicine research has increased by 2.4 times, from 50 million US dollars to 121.4 million. One outcome of the American funding, for Chinese medicine, is the publication of the results of a large trial of acupuncture for osteoarthritis (OA) in the knee[2] on the very same day that Vioxx, a common anti-inflammatory medication for OA, was recalled. The trial found that acupuncture reduced pain and improved function of OA patients with few adverse effects, suggesting that acupuncture should be considered one of the first-line treatments for OA. This is a good example of how evidence-based medicine might contribute to the development and acceptance of Chinese medicine.

The ultimate aim of this Journal is to stimulate discussion on how to improve our practice. It does not matter whether the knowledge is from clinical trials and systematic reviews or from personal experience and classical literature, so long as the information presented is valid and interpreted with caution. The Editorial Board and our peer reviewers go to great lengths to ensure the methods of all accepted manuscripts are sound and thorough. This helps us to maintain a high standard for published papers.

In this issue, a fascinating paper on the formation of the acupuncture meridians is included. The pathways, anatomic structures and physical characteristics of the meridians have been extensively studied, but with little significant evidence. Here, the author takes a different approach and proposes that the meridians are a functional system developed from withdrawal reflexes upon painful stimulation. The concept is particularly relevant to the application of acupuncture in pain management. Also included is an experiment investigating different effects of four main acupoints on the automatic nervous system in healthy humans. Another contribution on evidence-based research is a systematic review of acupuncture for managing pain in labour. The results suggest a promising treatment for women looking to use additional therapies during child-birth. We have also included a report on how a combined therapy of acupuncture, manual techniques and self-stretching was used to treat a case of thoracic outlet syndrome (TOS), a common yet often neglected condition. Continuing from our previous topics on reporting adverse events is a short paper on drug and herb interactions, providing a theoretical framework for the mechanisms of potential interactions. More papers on this topic will be published in future issues.

Where Chinese medicine will be in ten years in this country largely depends upon us – Chinese medicine practitioners, educators and researchers. We are proud that the *Australian Journal of Acupuncture and Chinese Medicine* provides a forum to stimulate debates and generate ideas.

REFERENCES

1. Ryan JD. The use of evidence in acupuncture clinical practice. Aust J Acupunct Chin Med 2006;1(1):19–23.
2. Berman BM, Lao L, Langenberg P, Lee WL, Gilpin AM, Hochberg MC. Effectiveness of acupuncture as adjunctive therapy in osteoarthritis of the knee: a randomized, controlled trial. Ann Intern Med 2004;141(12):901–10.

Zhen Zheng
Editor-in-Chief

Guest Editorial

Charlie CL Xue PhD
Professor of Chinese Medicine and Director of the WHO Collaborating Centre for Traditional Medicine,
RMIT University, Melbourne, Australia

Evidence-based Chinese Medicine: Are We on the Right Track?

In late 2006, a public debate in China on whether or not traditional Chinese medicine should remain a key component of the Chinese public healthcare system resulted in a formal response by the Chinese Ministry of Health. The Government's position was that it strongly supported the retention of Chinese medicine in the healthcare system. The statement pointed out the substantial contributions that Chinese medicine has made, and continues to make, to the contemporary healthcare needs of China. However, despite Government support, the debate has continued, much to the bewilderment of health authorities, media and academics outside China.

Chinese medicine contributes a great deal to China's healthcare services, being used for the treatment of a wide range of conditions. Its therapies are frequently used in combination with Western medicine. Indeed, throughout the country there are many institutions that deliver integrated training in Western medicine and Chinese medicine. However, given the persistence of the debate about whether Chinese medicine continues to have a role in healthcare delivery in China, a question that has to be asked is, 'Have the Chinese effectively addressed integration of Chinese and conventional medicine?' I suggest that the answer to this question is 'no'. A related issue, that has concerned me since I commenced my Chinese medicine degree in Guangzhou, China in 1982, is whether or not the principles and practices of Chinese medicine should be grounded in scientific evidence.

During the twenty years since I graduated, I have frequently pondered why I dedicate myself to teaching, researching and practising Chinese medicine. The answer is always the same and quite simple. Before I received my university training, I personally experienced the benefits of Chinese medicine therapy. During my pre-university schooling, I suffered from a persistent, recurring condition which seriously impacted both on my studies and on my lifestyle in general. Eventually my father arranged for me to consult a local doctor, who was qualified in both Western and Chinese medicine, and who had a reputation in my home town as somewhat of a 'miracle healer'. After a thorough assessment of my condition, I was prescribed herbal medicine. After several months of treatment, it was clear that my condition had improved, to the extent that I was able to resume my studies at school and engage in the other activities of youth that had been previously denied me. This experience of the healing powers of Chinese medicine had a significant influence on my subsequent choice to take up Chinese medicine as a career.

When I finished my Bachelor of Medicine, I started out as a practitioner of Chinese medicine and shortly afterwards managed to combine practice with a clinical teaching role. I soon found myself responding to my patients' anxieties about their conditions and their prognoses. Frequently they wanted reassurance that Chinese medicine was the most appropriate treatment for their condition and that it was safe.

I will always be indebted to two of my professors at Guangzhou University of Chinese Medicine: the head of my department, Professor Yang Wenhui, an expert in neurology, who taught me the principles of Western medical diagnosis and their integration with Chinese medicine practice; and Professor Lai Shilong, an expert in clinical epidemiology in the Department of Research at the University. Professor Lai, who had spent some time at McMaster University in Canada, introduced me to the concept of evidence-based medicine and convinced me of its relevance to Chinese medicine. Professor Lai established the Chinese National Centre for Design, Measurement and Evaluation (DME) for Chinese Medicine, at Guangzhou University of Chinese Medicine. This Centre, which was the only one of its kind in China, attracted great interest from medical academics throughout the country and was to have a major influence on the development of Chinese medicine over the subsequent two decades. The programs of the Centre for DME for Chinese

Medicine were all directed at developing an underpinning evidence-base for Chinese medicine.[1] The ultimate objective was to integrate Chinese medicine and Western medicine, whilst retaining the key principles and underlying values of Chinese medicine that had been developed over several thousand years. Of course, there are many who oppose the move to integration, declaring that the evidence-based approach is not suitable for the ancient system of healthcare[2] and that the traditional methods and experience should be the only considerations in the Chinese medicine paradigm.

Of all the forms of traditional medicine, globally, Chinese medicine is the most established. Over thousands of years its development has been documented and preserved. However, much of the well-organised archival material can now be reinterpreted in the context of contemporary scientific knowledge. As for Western medicine there is an emphasis on the collection of evidence to define specific disease syndromes. However, unlike its Western counterpart, so far the Chinese medicine systems have not provided a means of determining the quality of clinical evidence for its effectiveness.[3]

In recent decades, Chinese medicine has been increasingly embraced in Western communities. In part, this results from the inability of Western medicine to effectively deal with the increasing incidence of the many chronic illnesses associated with increasing life span. In part, the increased popularity is due to a preference for therapies which are considered to be holistic, rather than disease-focused. In part, it is due to concerns about adverse effects of conventional therapeutics. Initially, acupuncture was the predominant form of Chinese medicine in common use in the West, being practised by both conventional medical practitioners and traditional Chinese medicine practitioners. However, with the introduction of degree programs in Chinese herbal medicine in the universities of Western countries, the popularity of Chinese herbal therapies has increased substantially. This has been the experience in many Western societies, including Australia.[4]

There are continuing concerns about Chinese medicine, in particular, about what is still considered to be a lack of evidence for its safety and efficacy.[5] Safety issues about acupuncture now seem to have been settled, probably due to markedly improved training in the therapy. However, concerns about the safety of herbal medicine persist. These have been reinforced by recent findings that a number of herbal ingredients have serious toxicities, some of which may be life-threatening.[6] There is also growing concern about the potential for herbal medicines to interact adversely with conventional medicines, that is, the possibility of herb–drug interactions.[7]

For both acupuncture and Chinese herbal medicine, lack of evidence of clinical efficacy will continue to impact on public acceptance of the therapy. The increasing emphasis on evidence-based Chinese medicine is supported by leading Chinese medicine researchers in China and elsewhere. There is no doubt that Chinese medicine is benefiting from high-quality scientific research that evaluates clinical evidence of efficacy to the standards that apply to conventional treatments. Examples of such outcomes include Chinese herbal treatments for irritable bowel syndrome[8] and allergic rhinitis,[9] and acupuncture treatments for chronic pain.[10] However, progress in evidence-based development of Chinese medicine has been spasmodic. This is due to the scarcity of well-trained researchers and the limited availability of funding for such research. With respect to the latter, a recent positive development in Australia was the decision of the National Health and Medical Research Council, this year, to allocate an initial $5 million to support CAM research. Hopefully, this initiative will see continued funding for CAM in future years.

Another impediment to the progress of Chinese medicine research is the existence of significant methodological challenges, for example, devising appropriate sham/placebo control interventions for clinical trials of acupuncture, and meeting the stringent regulatory requirements of therapeutic regulatory authorities for phase II trials on herbal medicine therapies. Also, the theoretical requirement for individualised treatments with Chinese medicine does not sit well with conventional clinical trial methodology.

In conclusion, much effort has been made globally to promote evidence-based Chinese medicine development and there has considerable progress. However, there remain major challenges. It is pleasing that Australia has been playing a leading role in the move towards evidence-based traditional medicine, including in areas such as regulation, education, and professional development. However, greater and concerted efforts of governments, the profession and research and training institutions are required. The World Health Organization (WHO) has adopted the evidence-based approach for ongoing traditional medicine development. In recent years, WHO has developed and promulgated traditional medicine terminology standards, clinical practice guidelines and disease classification. It is my view that we are on the right track, but realisation of the full potential of Chinese medicine to contribute to the healthcare needs of communities will be largely dependant on how effectively we can demonstrate that the undoubted benefits of traditional therapies can be supported by scientific evidence.

ACKNOWLEDGMENTS

The author would like to thank the constructive comments made by Professor David Story, Director of the RMIT University Institute for Health Innovations.

REFERENCES

1. Lai SL, Hu JQ, Guo XF. Evidence-based medicine and clinical studies of traditional Chinese medicine. J Guangzhou Univ Tradit Chin Med 2000;17(1):1–8.
2. Tonelli MR, Callahan TC. Why alternative medicine can not be evidence-based. Acad Med 2001;76(12):1213–20.
3. Tang JL, Wong TW. The need to evaluate the clinical effectiveness of traditional Chinese medicine. Hong Kong Med J 1998;4(2):208–10.
4. Xue CC, Wu Q, Zhou WY, Yang WH, Story DF. Comparison of Chinese medicine education and training in China and Australia. Ann Acad Med Singapore 2006;35:775–9.
5. Hensley MJ, Gibson PG. Promoting evidence-based alternative medicine. Med J Aust 1998;169(11–12):573–4.
6. Cheung T, Xue CC, Leung K, Chan K, Li CG. Aristolochic acids detected in some raw Chinese medicinal herbs and manufactured herbal products – a consequence of inappropriate nomenclature and imprecise labelling? Clin Toxicol 2006;44(4):371–8.
7. Zhou SF, Zhou ZW, Chen X, Li CG, Herington A. Identification of drugs that interact with herbal medicines. Drug Discov Today 2007 [In press].
8. Bensoussan A, Talley NJ, Hing M, Menzies R, Guo A, Ngu M. Treatment of irritable bowel syndrome with Chinese herbal medicine. JAMA 1998;280(11):1585–9.
9. Xue CC, Hugel H, Li CG, Story DF. Does acupuncture or Chinese herbal medicine have a role in the treatment of allergic rhinitis? Curr Opin Allergy Clin Immunol 2006;6(3):175–9.
10. Xue CC, Dong L, Polus B, English RA, Zheng Z, Da Costa C et al. Electro-acupuncture for tension type headache: a randomised controlled trial. Headache 2004;44(4):333–41.

Letters to the Editor

Dear Zhen Zheng,
Congratulations on a well-presented journal. I like the touch of it – important for us tactile praccies. I immediately made myself comfortable on my deck in the evening Queensland air to have a read. I have to admit though, I skimmed through the heavy research papers.

The paper I enjoyed most was 'Oculomotor Palsy Treated with Electroacupuncture' [by Yong-Suk Kim]. It got to the heart of clinical practice, despite its simplicity. Yes, this is what I want to hear. Reading these case studies creates confidence in individual acupuncturists to treat similar unusual cases that they may not have treated before, and also provides groundwork on how to tackle it.

I thought the article by JD Ryan on 'The Use of Evidence in Acupuncture Clinical Practice' very relevant. How many of us working acupuncturists want evidence on the efficacy of acupuncture? Are we not satisfied through experience that most of the time there is a positive result? Think of the billions of dollars spent on drug trials and yet there are still such varying results when these drugs are finally prescribed to individuals. How can we put a holistic treatment such as acupuncture in a test tube? Okay, so research plays a role, but let's not get carried away.

I will be happy if at least one acupuncture case study goes into each issue. Yes, I know, it is up to us practitioners in the field to write such case studies and muster up our courage to submit a manuscript with all its protocols.

Patsy Wilcox
Ferny Hills, Queensland

To Zhen and team,
Congratulations on the production of such a high quality journal! I found the articles interesting and thought-provoking, especially Damien Ryan's examination of the belief systems underlying the practice of Chinese medicine. I also appreciate the efforts to include research which is clinically useful to practitioners in a reductionist world. It is difficult to both honour and question the fundamental principles of Chinese medicine; however, I believe this is the way forward.

Jenny Layton
Balliang, Victoria

Meridians: Emergent Lines of Shape Control

Phillip Beach* DO, DAc, OsNZ
Wellington, New Zealand

ABSTRACT

The Chinese concept of meridians has proved to be resistant to a bioscience understanding. Many investigative techniques and technologies have been applied to the human body in the search for a material substrate that is meridian-like. Using evolutionary biomechanics and embryology, the author has constructed a new model of human movement. The model, called 'Contractile Fields', has flexion/extension, side-bending, twisting, squeezing, limb, and visceral fields of contractility. That model was then turned towards the enigmatic meridians mapped over 2000 years ago in China. Recoil from a noxious stimulus is a reflex that all animals develop as a way of avoiding hurt. Acupuncture and moxibustion can elicit this reflex. Lines emerge on the body-wall and limbs that elicit similar biomechanical recoil vectors. The neurophysiology of recoil allied to the concept of 'border control' predicts 12 + 2 meridians as being the theoretical minimum needed to predictably control subtle human shape. Shape and function are closely coupled. Meridians are hypothesised to be 'emergent lines of shape control'.

KEYWORDS emergent, contractile fields, embryology, shape control, meridians.

Introduction

The practice of acupuncture within Traditional Chinese Medicine (TCM) is predicated on the existence of meridians. The map of meridians is the world's oldest medical map still in clinical use. The genesis of the map took hundreds of years and emerged from a culture that numbered 50 million over 2000 years ago. Gradually, medical anthropology is revealing the history of TCM, with new finds constantly adding depth to interpretation. The early Chinese medical theorists maintain that they mapped the movement of 'Blood and Qi'. Disturbance of Blood and Qi flow they saw as being the genesis of disease. This flow was condensed down to 12 + 2 tightly mapped conduits or meridians. With the influence of Western science in the 1900s, meridian mapping became anatomically referenced. A modern text, *A Manual of Acupuncture*,[1] runs to more than 600 pages of detailed description. Acupoints located on those meridians are needled in three-dimensional patterns called point prescriptions to treat disease. The practice of acupuncture is now a global phenomenon with well over two billion people having access to this form of treatment.

Bioscience has looked in vain for the meticulously mapped meridians. Dissective studies, CAT scans, MRI scans, PET scans, thermal imaging, radioactive tagging, scanning electron microscopy, etc.; the full armamentarium of modern medical investigative techniques has failed to demonstrate a physical substrate that is meridian-like. There are hints of something afield (e.g. endogenous opiates and pain, some positive clinical outcomes), but to date, bioscience has been unable to fathom a contemporary understanding of the complex meridial map. The situation is analogous to the use of herbs before pharmacology – herbs 'worked', but how they did so was unknown.

The author suggests that the Chinese did indeed map a form of movement. An obvious movement, given the nature of needles and moxibustion, they mapped 'recoil from a noxious stimulus'. When you are pricked or burnt, you will move coherently and quickly away from the source of hurt. Recoil has a history that dates back to the pre-Cambrian animal diversification 540 million years ago (mya). The earliest life on this planet (600+ mya) was Edenic in that there is no evidence of predation – life was tethered or floated randomly. The pre-Cambrian period ushered in an explosion of new animal body plans,[2] including animals that moved volitionally with eyes and balance organs; predation with tooth, claw and sting became the way of the world. Teeth and recoil have a long evolutionary co-history –

* E-mail: phillipbeach@runbox.com

Aust J Acupunct Chin Med 2007;2(1):5–8.

needles and moxibustion plug straight into this core survival reflex.

Interestingly, you are not born with a coherent recoil reflex. Rather, it takes years for the reflex to mature as the central nervous system (CNS) learns to map and control the moving body. A baby moves when hurt, but that movement is poorly co-ordinated. Maria Fitzgerald of University College London has studied the neurology of recoil in the human baby.[3] Infants' nociceptive fields are larger, smeared in body image, more excitable, and noxious insult leaves a long-lasting deleterious CNS impression/facilitation, as the inhibitory neurons mature later. Babies and young children have yet to develop the accurate neuronal mirroring in the brain needed for effective recoil. The Chinese suggest babies do not have meridians (at this age the organs dominate); they emerge fully at the age of six or seven years. This is a crucial hint left by earlier Chinese medical theorists of the methodology they used to construct the meridial map.

There is an underlying pattern to recoil once it has matured as a reflex, and the Chinese mapped this pattern. Meridians are hypothesised to be 'emergent lines of shape control'. This deceptively important short phrase will take some contextualising.

The author wrote his fourth-year osteopathic thesis (British College of Osteopathic Medicine, 1983) on the subject of 'muscle chains'. If I get up from this chair and turn to greet you, I have just seamlessly employed hundreds of named muscles in a tight, temporal sequence. As my concepts matured over the years, I realised the most biologically valid way to explore muscle patterning would be via an appreciation of the evolutionary biomechanics of vertebrates, allied to the embryological development of the musculoskeletal system. Mammalian musculature is complexly patterned about a tri-laminar body-wall with an overcoat of pectoral and pelvic muscle. Looking for primary movement patterns within that complexity led me to develop a new model of movement that is called the Contractile Field (CF): 'contractile' as it is a generic term rather than a tissue-specific term; 'fields', as opposed to 'chains' or 'trains', as there is nothing chain-like about how we move. 'Fields' and field theory offer a far more appropriate understanding of how muscle warps and wefts, dives and surfaces, braids and coalesces as it courses about the body. By the late 1990s, all the major building blocks of the CF model were in place when I then realised it could be used to shed a new light on the meridial map. This article will not detail the anatomy and biomechanics of CFs. At this stage it is enough to realise a blunt needle or a burn elicits a whole-body response. However, for a deeper understanding of this decoding hypothesis, further elucidation of the fields provides additional insight.

A Thought Experiment

Imagine you are standing upright and naked in a deep swimming pool. Your feet are weighted to the pool floor, your head is under the water, but a snorkel dispels any panic. An experimenter is able to prick any part of your body with a shark tooth – without warning.

FIGURE 1 Cartoon depicting a person, upright in water with a snorkel, pricked at CV12, shown in comic shock, flexing the body-wall and moving backwards away from the insult.

On the body-wall, pricking you ventrally will generally produce flexion and recoil away. Moving away from penetrative insult has obvious survival value. Pricking the side of your body will produce a side-bending ipsilaterally or contralaterally. A needle in the back will extend you and move you forwards. Lines emerge on the body-wall that, when stabbed with a tooth or needled with a 2000-year-old Chinese acupuncture needle (read, blunt), will initiate a similar movement vector.

Let's use the Conception Vessel (CV) channel (*Renmai*) to demonstrate and develop this idea. A needle to the midline of your abdomen will initiate flexion and recoil away, as seen when needling CV12, 11, 10, 9, 8 and 7. Then something interesting happens. Needling CV6 *Qihai* marks the beginning of a change in the recoil direction. Because of the lumbar curve in your back, you are now as likely to extend your pelvis as flex. By the time you are at the level of CV4 *Guanyuan*, it is definitely better to extend the pelvis to escape the penetrating insult, as flexion at CV4 will push your pelvis towards the needle.

FIGURE 2 Thought experiment comically depicting extension of the pelvis when CV4 is pricked.

The Chinese give great importance to areas of the body where movement fields invert. SP21 *Dabao*, an acupoint that is historically important, is another of these field inversion areas on the body-wall. On the lateral body-wall, a noxious stimulus below SP21 will initiate an ipsilateral side-bending, whereas above SP21, side-bending will be generally contralateral. Needling the lateral jaw will produce a side-bending ipsilaterally until the zygomatic arch, when contralateral side-bending is the face-saving thing to do.

Developing this model further: Imagine standing in the pool and being needled at CV12 *Zhongwan* – you would flex and move backwards away from the danger. What cannot be guaranteed with one needle applied to the midline is your drift to the left or right as you move backwards. That left–right drift arises from small initial conditions at the moment of impact, such as the direction of your gaze or a slight twist in your back. To be able to predictably flex and send you straight backwards, with no 'ifs or buts' the experimenter would need to use two needles, one on either side of CV12 *Zhongwan*, say KI19 *Yindu*. Now, using pressure that is more penetrative on the left or right needle, recoil away will be controlled. In effect, this is a form of 'border control'.

Borders in biology – from the microscopic to the macroscopic – need two independent membranes in order to effectively control movement across domains. Earlier walls, which date to about 208 BC, preceded the Great Wall of China, so the Chinese were very border-conscious at a critical stage in the mapping of something we now call meridians.

The Leech

Bill Kirstan and John Lewis,[4] using a leech as a model organism, have studied the neurophysiology of recoil. This work is essential to a modern understanding of acupuncture. The leech was chosen as a model organism as it has only 40 sensory neurons distributed around the body-wall. A pinprick that elicits recoil will usually fire two sensory neurons, these feed down to interneurons that summate the available data and inform the motor neurons to move the appropriate part of the body-wall away. What Kirstan and Lewis discovered was the mathematical ability of the interneuronal layer. These nerve cells can add, subtract, compute sines and cosines, and manipulate trigonometric identities that would challenge a 15 year old with a calculator. As any leech knows, cos (φ–θ)! Kristin and Lewis suspect all higher organisms use overlapping sensory fields and an almost hard-wired sense of trigonometry to avoid penetrative insult.

How many emergent lines of shape control are needed to predictably control subtle human shape (morphology)? Borders will need to be identified and then controlled using meridians on either side of that border. The CF model identifies primary (mammalian) movement fields as: flexion/extension, side-bending, twisting left or right, squeezing/sucking, and limb fields. Each field borders other fields and the fields are profoundly interactive. Based on this analysis:

- The Dorsal and Ventral midline. Vertebrates are bilaterally symmetrical and so the midline is mandatory. (Conception Vessel and Governor Vessel channels)
- Bilateral/paraxial lines of border control of both the dorsal and ventral midline. (Inner Bladder channel and the Kidney channel)
- The lateral body-wall has an indistinct ventral/dorsal border. To control laterality, criss-crossed lines need to be placed near the dorsal and ventral margins of the lateral Contractile Field. (Gallbladder and Liver channels)
- Helical biomechanics are introduced when you needle intermediate lines on the body-wall, as helical biomechanics are a compound of flexion/extension and left–right side-bending. Rib angles on the thorax and the lateral raphe of the thoracolumbar region mark the intermediate dorsal body-wall; on the ventral body-wall the linea-semilunaris and the costochondral junction mark the intermediate line. (Lateral Bladder channel and the Spleen channel)
- Biomechanically, 14 lines will control a mammalian body-wall. The model predicts the dorsal and ventral midline as two lines, four para-axial lines to control the midline, four lines to control the lateral body-wall, and four lines that are intermediately placed to initiate helical movement. However, if you count around the torso, the Chinese map 16 meridians. The Chinese medical theorists recognised the importance of the nipple-line and the need

for its representation. Breasts and suckling lips are unique mammalian attributes; the bottom line – without a wet-nurse you starved. Embryologically, the nipple-line, in its early embryonic period, was intermediate in its placement on the body-wall,[5] near the SP meridian. During subsequent development, the arms rotate laterally and the legs rotate internally, pulling the skin and the nipple-line. (Stomach channel)

- Limbs: The embryonic limb bud is paddle-shaped and is described as having a pre-axial border (thumb side), a post-axial border (little-finger side), and ventral/dorsal axial lines that mark the midline of the limb bud (Fig. 3).[6] Limbs are derived from fins.[7] Fins are optimally placed on the body-wall of a fish to control pitch, yaw and roll. Small movements of a fin create large changes in direction. Vertebrate limbs became stout and propulsive, but in essence still control movement.

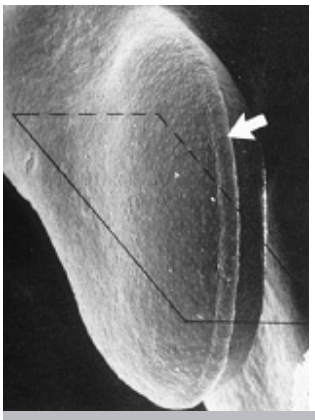

A limb bud with the dorsal axial line (SJ) marked as a solid line, the ventral axial line (PC) as a dashed line. The pre-axial border is controlled by the Large Intestine (LI) and Lung (LU) meridians; the post-axial border is controlled by the Heart (HT) and Small Intestine (SI) meridians.

The Apical Ectodermal Ridge (AER) is arrowed, a local summit of the whole embryo-encircling Wolffian ridge. Limbs, derived from fins, steer movement.

FIGURE 3 Limb bud at 32 days (from Larson[8]).

In theory, six lines are needed to control the limb-bud shape. Two lines are needed to control the leading edge of the limb bud, i.e. the pre-axial border (LU and LI/SP and ST); two lines to control the post-axial border (HT and SI/KI and BL); and two lines to mark the ventral/dorsal midline (PC and TE/LR and GB). These six lines allow accurate shape control of the limb bud. The importance of accurate limb-shape control is analogous to the control of an aeroplane's wing flap. Small changes at critical places in a system initiate large responses.

The Chinese must have pondered long and hard about how they could map the obvious similarities and the profound differences they found between arms and legs. Embryologically, the lower limb has a long-axis twist to it that the upper limb bud does not experience. Due to the internal rotation and long-axis twist of the lower limb, the quadriceps of the leg is analogous to the triceps of the arm. Note how the Chinese have placed the Stomach (ST) meridian, a Yang meridian, on the ventral surface of the body. The crossing of the leg Yin meridians at SP6 *Sanyinjiao*, the crossing of the Bladder (BL) meridian behind the knee and the crossing of the Stomach (ST) meridian at the hip joint, all suggest this attempt to map the long-axis rotation of the leg.

The decoding hypothesis presented here makes sense of much of the arcane information packaged with meridians, for example, the internal/external relationship. Meridians are coupled across borders because both are needed to control the border. One without the other is like a car only able to turn to the left. Six-channel pairing is the simple similarity between, for example, a ventral pre-axial border on the arm (thumb) being analogous to a ventral pre-axial border of the leg (big toe). Deep channels are fascinating. Meridians are depicted as being left/right and only at the mouth and genitals are the 12 meridians routinely depicted as being crossed. Contractile Field (CF) modelling leads one to consider where muscles decussate (cross) as they form the warp and weft of the body's musculature. Meridians, via the deep channels, are comprehensively decussed across the midline, particularly the ventral midline.

Shape Control

Meridians are emergent from a whole living organism that is able to react coherently to a noxious stimulus. When an organism is too tired (Qi deficient), the meridians will evaporate. No energy, no recoil. At death meridians depart; they will not be found in a cadaver. They are not a distinct biological tissue and this is why they have proved to be so elusive to bioscience. Meridians, it is proposed, allow subtle shape to be predictably manipulated. From this perspective, acupoint combinations to treat clinical syndromes are a form of three-dimensional shape manipulation. Shape and physiological function are closely coupled.

Acknowledgments

Figure 3 is reprinted from Human Embryology, WJ Larson, p. 284, copyright 1993, with permission from Elsevier.

References

1. Deadman P, Al-Khafaji M, Baker K. A manual of acupuncture. East Sussex, UK: The Journal of Chinese Medicine Publications; 1998.
2. Raff RA. The shape of life: genes, development, and the evolution of animal form. Chicago: University of Chicago Press; 1996.
3. Fitzgerald M. The birth of pain. Medical Research Council, Summer 1998, No. 78.
4. Howlett R. Simple minds. New Scientist 1998;185(2139):28–32.
5. Carlson BM, editor. Human embryology and developmental biology. St Louis: Mosby; 1994.
6. O'Rahilly RR, Müller F. Human embryology and teratology. 2nd ed. New York: Wiley-Liss; 1996.
7. Liem KF, Bemis WE, Walker WF, Grande L. Functional anatomy of the vertebrates: an evolutionay perspective. 3rd ed. Orlando, FL: Harcourt; 2001.
8. Larsen WJ. Human embryology. New York: Churchill Livingstone; 1993.

Rapid Reponse of Autonomic Nervous System to Acupuncture in Subjects Under Stress

Mark W Strudwick*[1] PhD
Katie L McMahon[1] PhD
ST Boris Choy[2] PhD

1. Centre for Magnetic Resonance, The University of Queensland, Brisbane, Australia
2. Department of Mathematical Sciences, University of Technology, Sydney, Australia

ABSTRACT

Introduction: During functional magnetic resonance imaging (fMRI) investigating effects of acupuncture, numerous subjects reported immediate reduction in anxiety upon needle insertion. We hypothesised that the autonomic nervous system (ANS) reacted more rapidly to acupoint stimulation than previously reported. We investigated whether valid results could be obtained from 220 seconds of pulse recording. Furthermore, we looked for evidence that ANS responses differed depending on acupoints stimulated. Methods: 40 subjects participated in each of two sessions of acupuncture using LI4 *Hegu*, SP6 *Sanyinjiao*, PC6 *Neiguan* or ST36 *Zusanli*. A sterile hypodermic needle (Terumo, Ø0.50 × 16 mm) was inserted into the selected point. After a 10-minute washout period, 0.5 mL of normal saline was injected into the point at 30-second intervals for 5 doses, a total dose of 2.5 mL in 150 seconds. Continuous pulse recording was commenced 70 seconds before the first injection and continued for 220 seconds until the end of the injections. Calculated spectral power of the recordings was compared between the pre-stimulation and stimulation phases. Results: Paired-samples t-tests showed significant increases in low frequency (LF) power band for *Sanyinjiao* and *Neiguan* and in LF/HF (high frequency) ratio for *Hegu*, but not for *Zusanli*. A significant decrease in heart rate (HR) from baseline was demonstrated for all points by the end of the experiment, 10 minutes after cessation of stimulation. Conclusion: The significant decrease in HR between baseline and end-point implies effectiveness of point injection (PI) for acupoint stimulation. The initially elevated ANS response to an alien experimental environment was not reduced by acupoint stimulation, discounting ANS modulation as a cause for the self-reported reduction in anxiety. Despite the severe experimental environment, it was possible to show changes in HRV produced by stimulation of different acupoints, these changes being different between points.

KEYWORDS acupuncture, autonomic nervous system, heart rate variability, point injection, power spectral analysis.

GLOSSARY ANS: Autonomic nervous system, CNS: Central nervous system, EA: electroacupuncture, ECG: Electrocardiography, FFT: Fast Fourier transformation, fMRI: functional magnetic resonance imaging, HF: High frequency, HR: Heart rate in beats per min, HRV: Heart rate variability, LF: Low frequency, LF/HF: Ratio of low frequency to high frequency, PI: Point injection, PPG: Photoplethysmography, PSA: Power spectral analysis.

* Correspondent author; e-mail: mark.strudwick@uq.edu.au

Aust J Acupunct Chin Med 2007;2(1):9–15.

Introduction

During the course of a number of functional magnetic resonance imaging (fMRI) experiments conducted to determine the effects of acupoint stimulation on the central nervous system (CNS), a number of subjects reported immediate reduction of anxiety upon stimulation. This relaxation seemed to continue after the end of the experiments. Acupuncture is reported to modulate activities of the autonomic nervous system (ANS),[1-4] but this effect has only been measured 30 minutes after stimulation. We hypothesised that the ANS reacted more rapidly to acupoint stimulation than previously reported. Since we were testing point injection (PI) as a method of acupoint stimulation, we also hypothesised that PI would cause a similar ANS response to that reported with manual needling or electroacupuncture (EA). To demonstrate these hypotheses, we needed to determine whether valid power spectral analysis (PSA) results could be obtained from 220 seconds of pulse recording. Published data indicate that 7.2-second recordings or recordings of 100 heartbeats could provide adequate spectral samples of heart rate variability (HRV) if results are cautiously interpreted.[5,6]

Photoplethysmography (PPG) gives the summary information reflecting both cardiac and blood vessel components of heart rate variability (HRV), and could be used to assess the response of the ANS. There is a significant correlation between inter-beat interval data measured by both electrocardiography (ECG) and PPG in short-term steady-state recordings.[7,8]

Sayers[9] first demonstrated changes in HRV associated with mental activity; later Malliani and Montano[10] concluded that autonomic changes induced by mental/physical activity could be investigated easily with spectral analysis of HRV to reveal aspects of interaction between sympathetic and vagal outflow. The low frequency (LF) spectral components of HRV are considered a measure of sympathetic tonus while high frequency (HF) reflects parasympathetic tonus and fluctuations caused by spontaneous respiration. The LF/HF ratio is indicative of sympathetic/parasympathetic balance,[11] a decrease in score being a possible indication of either an increased parasympathetic or decreased sympathetic tonus.

A number of studies have reported that acupuncture changes LF and HF components of HRV. Shi, Wang and Liu[12] reported a significant reduction in the LF component of HRV after needling PC6 *Neiguan* in patients suffering coronary heart disease. They also noted a significant change in LF/HF ratio when electroacupuncture was applied. In a study of acupuncture treatment for minor depression, Agelink et al.[13] showed a combined trend towards an increase in HF, decrease in LF and an overall significant decrease in LF/HF ratio when needling classical points. Haker, Egekvist and Bjerring[14] noted a statistically significant decrease in heart rate (HR) after stimulation of LI4 *Hegu* and demonstrated an increase in sympathetic and parasympathetic activity during stimulation and a prolonged sympathetic decrease after stimulation. Only single acupoint stimulation was studied in the above-mentioned trials, and no study to date has compared the effects of different acupoints in the same subject. Clinically, a number of acupoints may be used in combination as treatment; it would be advantageous to understand the effects of each point on the ANS before the combined effects are studied.

Manual acupuncture, although widely used in research and clinical applications, is difficult to accurately control and hard to quantify, making reproducibility a research issue.[15] PI is an attractive exploratory method. Precise doses of fluid (usually normal saline) can be delivered into an acupoint at set intervals giving a reproducible stimulation session to session, although individually specific tissue distensibility and fluid resorption are seen as confounding variables.

AIMS

As part of a neuroimaging study into the effects of acupuncture on the CNS, we determined to investigate whether:

1. The ANS reacts more rapidly to acupoint stimulation than previously reported;
2. There are differing ANS responses from stimulation of different acupoints; and
3. PSA results obtained from 220 seconds of pulse recording could give interpretable data.

Methods

VOLUNTEERS

With approval from the University of Queensland (UQ) Medical Ethics Research Committee and the Uniting Health Care Human Research Ethics Committee, subjects were recruited from a pool of normal healthy volunteers comprised of UQ students and staff who had participated in previous neuroimaging trials.

Forty right-handed subjects (21 males) ranging in age from 18 to 52 (mean = 27) participated in each of two sessions of acupuncture stimulation. Of these, 13 (32.5%) were naive to acupuncture. No subject had a history of psychiatric or neurological disorder or head trauma with loss of consciousness, and pregnant or possibly pregnant females were excluded. Informed consent in writing was obtained prior to investigation. Subjects were instructed not to eat, drink caffeine-containing beverages, or smoke two hours prior to testing.

SELECTION OF ACUPOINTS

LI4 *Hegu* on the left hand and SP6 *Sanyinjiao* on the right leg were chosen for study in male subjects, and PC6 *Neiguan* on the right and ST36 *Zusanli* on the left were studied in female

subjects. The order of acupoint stimulation and the possible effects of the stimulation were not explained and all subjects considered this 'just another fMRI experiment' for which they had volunteered. A period of one week between acupoint stimulations allowed time for washout of any possible ongoing acupuncture effects.

No clinical importance was placed on the acupoints selected. The four acupoints were chosen because of their frequent clinical use, previous use in a research setting, and accessibility from within an MRI scanner. *Hegu* is a commonly adopted research acupoint as it is easy to identify.[17] *Sanyinjiao* is another common acupoint for research. *Neiguan* has been used in HRV studies[13] and *Zusanli* has been investigated previously with fMRI.[18]

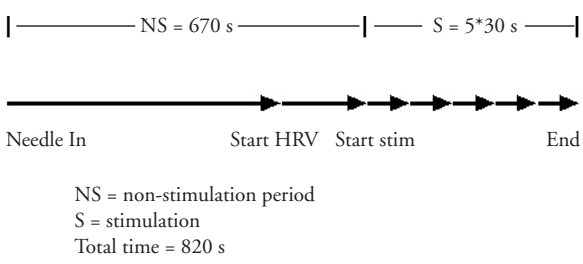

FIGURE 1 Design for acupoint stimulation

STIMULATION

An acupuncturist with 30 years experience in traditional needling techniques and four years experience in PI (MWS) performed all stimulations. Under normal conditions for skin penetration, a hollow Terumo Neolous (Terumo Corp., Elkton, MD, USA) Ø0.50 × 16 mm sterile, single use needle was inserted to a depth of 13 mm into the selected point 10 minutes prior to commencement of the experiment. The full effect of needle insertion was reported to occur within the first three seconds after needle placement,[15] and we considered a 10-minute washout period to be adequate, with any effects demonstrated after this a result of stimulation due to saline infusion.

A 10 mL Luerlok syringe containing sterile normal physiologic saline (0.9% NaCl) was mounted in a purpose-built computer-controlled syringe driver and connected remotely to the needle by minimal volume tubing. Commencing 70 seconds after starting the imaging experiment and PPG acquisition, 0.5 mL saline was delivered at a rate of 1.0 mL/s into the acupoint every 30 seconds for five doses, giving a total stimulation time of 150 seconds and a total experimental time of 220 seconds (Fig. 1). Figure 2 outlines the basic saline delivery layout.

PRESSURE RECORDING

Tissue resistance was measured with a conventional piezo bridge sensor (Baxter, Kobe, Japan) connected in-line. Intrapoint pressure recordings, later used as a covariant for data analysis, were made at 2.5-second intervals in parallel with PPG and neuroimaging recordings.

PULSE RECORDING

The beat-to-beat pulse interval was recorded from a pulse probe (K2203 4752866; Siemens, Erlangen, Germany) attached to the right middle finger. Recording commenced at the beginning of the neuroimaging experiment and continued for 220 seconds until completion of fMRI image acquisition.

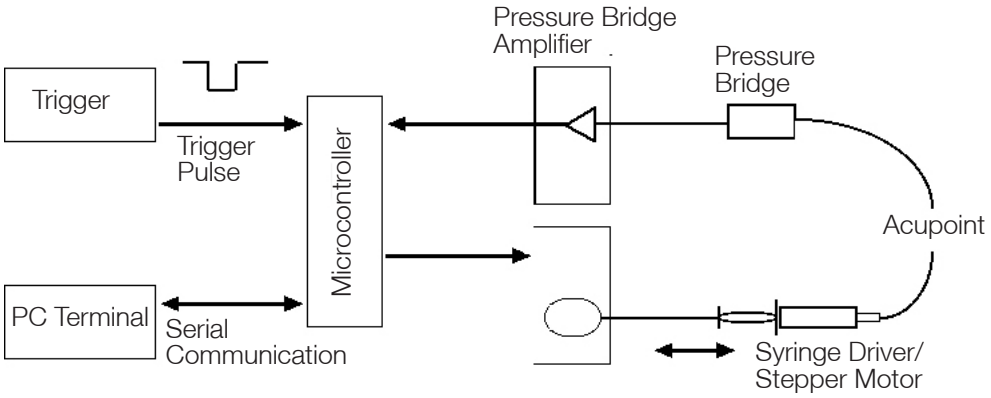

FIGURE 2 Basic layout of saline delivery

1 Volt peak-to-peak trigger pulse can be provided from any source. This system is configured for 2 sources; 1. Manual push button operation for use in the PI validation study; 2. Automatically from a square wave pulse delivered from a Siemens Magnetom (Siemens, Erlangen) MR scan system.

11 000 samples of beat-to-beat interval were acquired, in total, at a sampling rate of 50 Hz. These samples were subdivided into two components: the first 3500 samples acquired before onset of saline infusion ('rest'), and the remaining 7500 samples acquired during the 150 seconds of acupoint stimulation ('task'). Each of the two components was analysed separately using HRV Analysis Software 1.1 for Windows.[19] Data were detrended using a smoothness priors algorithm to remove LF baseline trends.[20] Power spectral analysis of R-R interval variability was performed using a 1024-point fast Fourier transformation (FFT) with interpolation rate of 2 Hz and a parametric 16-order autoregression model. Results were returned in normalised units of LF and HF, as well as an LF/HF ratio.

HEART RATE RECORDING

During both stimulation experiments, baseline HR was recorded before entering the MR suite and an end-point measurement was recorded after leaving the MR suite, 10 minutes after the end of acupoint stimulation and needle removal.

STATISTICAL ANALYSIS

Data were analysed in SPSS 11.0 (Macintosh Version 11.0.4, SPSS Inc.) to determine any significant modulation of the ANS resulting from the stimulation paradigm. Spectral components of HRV, and HR, across the four acupoints were analysed with paired t-tests to determine any significant differences between baseline and end-point of the experiment. One-way ANOVAs were used to examine any overall difference in acupoint pressure between baseline and stimulations, and amongst stimulations themselves. A multivariate ANOVA (MANOVA) model was used to test whether HR at the four time points was different across the two stimulations.

Results

Since raw pulse-recording data were affected by noise, only selected data were included in this section. Results are presented as mean and standard deviation in Table 1. Measured in normalised units, resting LF ranged from 73.9 to 83.7 (mean = 78.8), resting HF from 21.5 to 25.3 (mean = 23.4), and resting LF/HF from 3.5 to 4.2 (mean = 3.9) across all acupoints. Corresponding ranges during acupoint stimulation were 75.7–83.7 (mean = 81.2) for LF, 20.1–22.2 (mean = 21.2) for HF, and 4.0–4.7 (mean = 4.4) for LF/HF ratio. Paired t-tests of the mean values at rest compared with stimulation showed statistically significant increases in the LF component of HRV for *Sanyinjiao* and *Neiguan* and a significant increase in the LF/HF ratio for *Hegu*. Stimulating *Zusanli* produced no significant changes in any aspect of HRV.

Figure 3 graphs pressure recording at baseline through the five injections from each point. Repeated-measures ANOVA of peak acupoint pressures at the baseline and the five doses measured for the four individual acupoints demonstrated a significant difference (P <0.001) while a similar repeated-measures ANOVA at the five doses only showed no significant difference (P = 0.80). To evaluate the possibility of an 'all or nothing' response to the first injection alone, paired-samples t-tests were conducted to compare baseline intrapoint pressure (prior to injection) with pressure measured after the first injection. There was a statistically significant increase in pressure from rest to first injection at all four acupoint sites as shown in Table 2, as would be expected.

Paired t-test of the HR change from baseline to end-point (10 minutes after end of experiment) showed a statistically significant decrease in HR (summarised in Table 3).

TABLE 1 Mean (and standard deviation) of the spectral analysis of heart rate variability measured at rest and during point injection at four acupoints

	LI4 *Hegu* (n = 20)		SP6 *Sanyinjiao* (n = 21)		PC6 *Neiguan* (n = 18)		ST36 *Zusanli* (n = 17)	
	Rest	Task	Rest	Task	Rest	Task	Rest	Task
LF	83.69 (21.40)	82.93 (18.38)	77.69 (7.22)	83.69** (10.51)	73.88 (11.70)	82.37* (12.63)	74.71 (7.82)	76.82 (6.6)
HF	25.26 (7.89)	20.65 (10.41)	21.49 (7.45)	20.05 (7.19)	24.66 (9.69)	20.52 (6.86)	23.95 (8.88)	22.19 (7.48)
LF/HF	3.48 (0.91)	4.54* (1.58)	4.23 (2.16)	4.73 (1.74)	4.21 (4.17)	4.49 (1.77)	3.73 (1.93)	3.96 (1.64)

Notes: Rest denotes a period of 70 seconds before onset of point injection. Task denotes a period of 150 seconds of PI stimulation.
LF = Low Frequency component in normalised units; HF = High Frequency component in normalised units; LF/HF = calculation ratio LF/HF.
* $P < 0.05$ ** $P < 0.01$

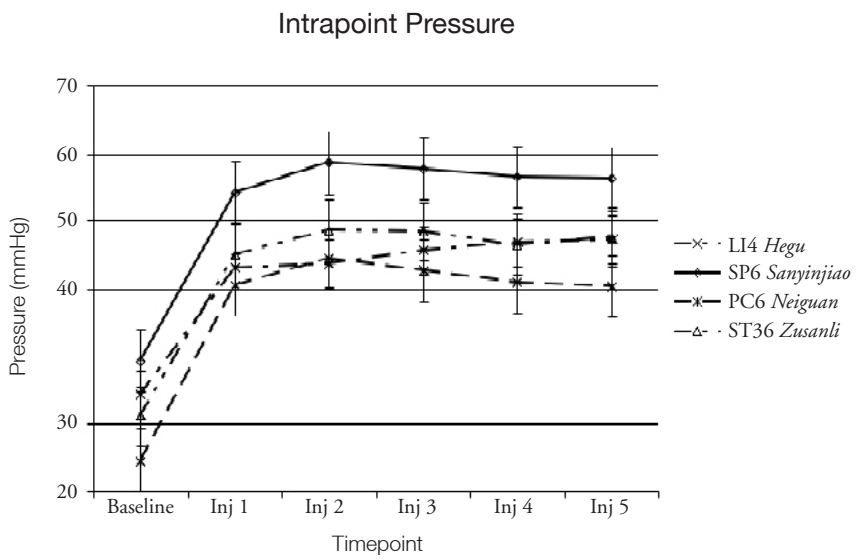

FIGURE 3 Intrapoint pressure measured at five timepoints (mean, SEM)

Timepoint 0 is the baseline pressure recorded after needle insertion and 10 min before first saline injection. Timepoints 1 to 5 are the times of each 0.5 mL injection.

MANOVA showed there was no difference in HR resulting from the different acupoint stimulations (Wilks's Lambda = 0.94, F(4, 75) = 1.224, P = 0.308).

Discussion

This is the first study to compare the effects of acupuncture at different acupoints in the same subject with a novel, reproducible stimulation method, namely PI.

Normal values for the LF and HF spectral components of HRV (in normalised units) are given as: LF 54 ±4 ms^2 and HF 29 ±3 ms^2; LF being seen as a measure of sympathetic tonus while HF reflects parasympathetic tonus and fluctuations caused by spontaneous respiration. The LF/HF ratio (normal range = 1.5–2.0) is used to indicate balance between sympathetic and parasympathetic tone[11] with a decrease in the score being a possible indication of either an increase in parasympathetic or decrease in sympathetic tone.

In this study, LF was elevated whereas HF was reduced beyond the normal range, even in the pre-stimulation phase of the experiment, indicating the subjects were anxious. The reasons for this relate to the specific experimental design. Data were collected during an fMRI experiment designed to study the effects of acupoint stimulation on the CNS. The stimulation was delivered in a novel manner – by point injection. These conditions presented an alien environment that included high noise, confinement to a narrow tunnel and intentionally reduced visual stimulation (all related to the fMRI experiment), and also the needle insertion with expectation of later saline infusion. Understandably these conditions provoked an anxiety response in the subjects as evidenced by the initially elevated LF components and LF/HF ratios. During the stimulatory (task) phase of the experiment there was a significant increase in LF components related to the sympathetic ANS instead of a decrease as we hypothesised, discounting ANS modulation as a cause for the reduction in anxiety reported by subjects.

Changes in HRV varied depending on the acupoints stimulated. *Sanyinjiao* and *Neiguan* both produced elevation of the LF component; *Hegu* caused an increase in the LF/HF ratio without significant changes in LF or HF; *Zusanli* produced no significant modulation of the ANS. Our results are consistent with those reported by Haker, Egekvist and Bjerring,[14] who demonstrated an increase in the LF and HF power spectra during stimulation of *Hegu* with a prolonged sympathetic decrease and an increased LF/HF ratio after stimulation (LF/HF: pre-stimulation = 1.467, stimulation = 1.365, post-stimulation = 1.562). The significant decrease in HR recorded 10 minutes after stimulation of each acupoint, indicating an ultimate increase in parasympathetic activity, is also consistent with the observations made by Haker, Egekvist and Bjerring.[14] The distinct ANS responses at different points need further

TABLE 2 Mean (and standard deviation) with results of paired-sample t-tests of initial intrapoint pressure (mmHg) and pressure after first injection

Acupoint	Baseline	First injection	Paired difference	|t|	df	*P* (2-tailed)
LI4 *Hegu*	34.19 (8.30)	53.00 (11.19)	18.18 (7.41)	11.63	20	< 0.001
SP6 *Sanyinjiao*	39.29 (15.85)	64.24 (24.39)	24.95 (14.26)	8.02	20	< 0.001
PC6 *Neiguan*	24.42 (4.30)	50.47 (20.49)	26.05 (18.45)	6.16	18	< 0.001
ST36 *Zusanli*	31.00 (5.68)	55.11 (7.26)	24.11 (6.77)	15.53	18	< 0.001

TABLE 3 Mean (and standard deviation) with results of paired-sample t-tests of heart rate (min^{-1}) measured at baseline and end of experiment

Stimulation	Baseline	End-point	Paired difference	|t|	df	*P* (2-tailed)
1	66.5 (1.9)	62.2 (1.5)	4.7 (1.3)	3.57	39	< 0.001
2	68.6 (1.7)	64.8 (1.7)	3.7 (1.1)	3.44	39	< 0.001

investigation in healthy and diseased human subjects, and this may shed light on the interpretation of the clinical response or outcome.

The evidence from HRV and HR appear contradictory as HRV indicates increased stress and HR decreased sympathetic response. Evidence from acupuncture analgesia studies suggests that a delayed response to acupuncture exists.[21] Yao[22] demonstrated that acupuncture stimulation produces a temporary increase in sympathetic tone, followed by a more prolonged depression. Our HRV data were collected during the experimental stimulation period and the HR data 10 min after. This time differential might explain the contradictory results.

One of the limitations of this study is the short pulse recording time. The preferred time is five minutes. However, the Task Force of the European Society of Cardiology and the North American Society of Pacing and Electrophysiology[11] states that a minimum of two minutes is required to address the LF component. The experimental design constrains recording time to a maximum of 220 seconds. HRV analysis standards formalised by the Task Force prefer frequency domain methods for the investigation of short-term recordings as these usually provide results more easily interpretable in terms of physiological regulation. The document states, 'Unless special investigations are performed that use the 24-hour HRV signal . . . the results of the frequency-domain analysis are equivalent to those of the time domain analysis.' Data from the engineering literature indicated that an adequate spectral sample of HRV could be made with a 7.2-second record[5] or with 100 heartbeats.[6] Although we were unable to perform the five-minute recordings usually required for confident interpretation of HRV spectral analysis, our comparison with published data provides preliminary validation for this study and the methods employed. It proved possible to determine short-term modulation of the ANS in response to PI at acupoints.

Since decreased HR is a response to parasympathetic modulation and is a known response to effective acupuncture,[3] it could be inferred that acupoint stimulation by PI is effective as a method of stimulating acupoints. Whether this is a result of the needle insertion alone, as suggested by Marcus,[15] who considers the acupuncture effect to have occurred within the first three seconds of needle placement with no further effect produced over time, or in combination with fluid injection and tissue distension, needs further investigation.

Analysis of intrapoint pressure data demonstrated an apparent 'all-or-nothing' response. The pressure recorded after needle insertion but before any saline injection was significantly different from that recorded immediately after the first injection – an expected result. Further injections produced no significant difference in intrapoint pressure from dose to dose. This may be explained by a dynamic system involving tissue distensibility and saline resorption factors. PI could be used as a research

tactic to overcome some of the perceived problems of controls in acupuncture trials. If PI does produce similar effects to traditional methods, and the measured results are a result of tissue distension or minor trauma, an acupoint may be used as its own control.

Conclusion

We have demonstrated the possibility of investigating an immediate response of the ANS to acupoint stimulation. Changes in PSA of HRV indicative of ANS modulation could be demonstrated in a period as short as 220 seconds, much faster than previously reported. Point injection produces responses in HR and HRV that agree with previously published data, a possible indication of the similarity of effect between PI and traditional needling. Despite the anxiety induced by the experimental environment, it was possible to show differing ANS modulation at different points, these changes differing between acupoints. However, the immediate relaxation upon needling insertion is not related to the moderation of the ANS.

Acknowledgments

We thank Dr Greig de Zubicaray (Centre for Magnetic Resonance, UQ) for expert technical assistance and advice on data collection and analysis, and Dr S Wilson (School of Information Technology & Electrical Engineering, UQ) for expert technical assistance with the syringe driver and software.

This work was partially funded by the University of Queensland (External Enabling Grant), the Australian College of Natural Medicine (Project Grant), and the Australian Acupuncture and Chinese Medicine Association (Project Grant 05/02).

References

1. Ballegaard S, Muteki T, Harada H, Ueda N, Tsuda H, Tayama F et al. Modulatory effect of acupuncture on the cardiovascular system: a cross-over study. Acupunct Electrother Res 1993;18(2):103–15.
2. Knardahl S, Elam M, Olausson B, Wallin BG. Sympathetic nerve activity after acupuncture in humans. Pain 1998;75(1):19–25.
3. Nishijo K, Mori H, Yosikawa K, Yazawa K. Decreased heart rate by acupuncture stimulation in humans via facilitation of cardiac vagal activity and suppression of cardiac sympathetic nerve. Neurosci Lett 1997;227(3):165–8.
4. Sugiyama Y, Xue YX, Mano T. Transient increase in human muscle sympathetic nerve activity during manual acupuncture. Jpn J Physiol 1995;45(2):337–45.
5. Pinna G, Orsi G, Corsico G. Effect of record length on power spectral estimation of the heart rate variability signal. In: Computers in Cardiology [Conference proceedings], 1991; Venice, Italy: p. 261–4.
6. Srikanth T, Reddy MRS, Prabhakar D, Sridevi MR. Correlation of autonomic function tests to the HRV signal analysed using short time Fourier transform. In: Fifteenth Southern Biomedical Engineering Conference [Proceedings], 1996; Dayton, OH: p. 274–7.
7. Hainsworth R. The control and physiological importance of heart rate. In: Malik M, Camm AJ, editors. Heart Rate Variability. Armonk, NY: Futura Publishing Co.; 1995. p. 3–19.
8. Sharpley CF, Gordon JE. Differences between ECG and pulse when measuring heart rate and reactivity under two physical and two psychological stressors. J Behav Med 1999;22(3):285–301.
9. Sayers BM. Analysis of heart rate variability. Ergonomics 1973;16(1):17–32.
10. Malliani A, Montano N. Heart rate variability as a clinical tool. Ital Heart J 2002;3(8):439–45.
11. Heart rate variability: standards of measurement, physiological interpretation and clinical use. Task Force of the European Society of Cardiology and the North American Society of Pacing and Electrophysiology. Circulation 1996;93(5):1043–65.
12. Shi X, Wang ZP, Liu KX. [Effect of acupuncture on heart rate variability in coronary heart disease patients]. Zhongguo Zhong Xi Yi Jie He Za Zhi 1995;15(9):536–8.
13. Agelink MW, Sanner D, Eich H, Pach J, Bertling R, Lemmer W et al. [Does acupuncture influence the cardiac autonomic nervous system in patients with minor depression or anxiety disorders?]. Fortschr Neurol Psychiatr 2003;71(3):141–9.
14. Haker E, Egekvist H, Bjerring P. Effect of sensory stimulation (acupuncture) on sympathetic and parasympathetic activities in healthy subjects. J Auton Nerv Syst 2000;79(1):52–9.
15. Marcus P. Towards a dose of acupuncture. Acupunct Med 1994;12:78–82.
16. de Zubicaray GI, Andrew C, Zelaya FO, Williams SC, Dumanoir C. Motor response suppression and the prepotent tendency to respond: a parametric fMRI study. Neuropsychologia 2000;38(9):1280–91.
17. Deadman P, Baker K, Al-Khafaji M. A manual of acupuncture. Hove, UK: Journal of Chinese Medicine Publications; 1998.
18. Hui KK, Liu J, Marina O, Napadow V, Haselgrove C, Kwong KK, et al. The integrated response of the human cerebro-cerebellar and limbic systems to acupuncture stimulation at ST36 as evidenced by fMRI. Neuroimage 2005;27(3):479–96.
19. Tarvainen M. HRV Analysis Software 1.1 for Windows. The Biomedical Signal Analysis Group, University of Kuopio, Finland.
20. Tarvainen MP, Ranta-aho PO, Karjalainen PA. An advanced detrending method with application to HRV analysis. IEEE Trans Biomed Eng 2002;49(2):172–5.
21. Mayer DJ. Biological mechanisms of acupuncture. In: Mayer EA, Saper CB, editors. Progress in brain research. Amsterdam: Elsevier; 2000. p. 457–77.
22. Yao T. Acupuncture and somatic nerve stimulation, mechanism underlying effects on cardiovascular and renal activities. Scand J Rehabil Med Suppl 1993;29:7–18.

Helio ad

Interactions Between Chinese Herbal Medicines and Drugs

Chun Guang Li*[1] PhD,
Liping Yang[1] MPharm
Shu-Feng Zhou[2] PhD

1. The Chinese Medicine Research Group, Division of Chinese Medicine, RMIT University, Melbourne, Australia
2. Division of Pharmacy, School of Life Sciences, Queensland University of Technology, Brisbane, Australia

ABSTRACT

The popular use of herbal products in the general community raises concerns for potential herb–drug interactions. The risk of herb–drug interactions is increased if the herbal medicines are used concurrently with drugs which have a narrow therapeutic range, or are used in certain groups of patients, such as the elderly or those with impaired liver and renal functions. This short paper reviews some important concepts in herb–drug interactions and cases involving Chinese herbal medicines. It is important for Chinese medicine practitioners to understand, monitor and report potential herb–drug interactions.

KEYWORDS herb–drug interactions, Chinese herbal medicine, efficacy, safety, adverse reactions, cytochrome P450.

Introduction

Chinese herbal medicine, as one of the most developed remedies in traditional Chinese medicine, has been widely used by Chinese medicine practitioners for the treatment of a variety of acute and chronic diseases and conditions for thousands of years. Generally speaking, most Chinese herbal medicine practitioners are familiar with the concept of herb–herb interactions according to Chinese medicine theory, such as the synergistic/additive and/or antagonistic actions of some Chinese herbs under certain clinical conditions. However, many practitioners are less familiar with herb–drug interactions, possibly due to a limited understanding of the mechanisms underlying herb–drug interactions or difficulties in accessing existing data in this area.

The significant increase in the use of herbal medicines in the Australian community also raises concerns of potential toxicity of herbal products, including Chinese herbal medicines.[1] Such concerns are valid, considering some consumers or patients may take these products concomitantly with multiple conventional drugs for various conditions (particularly for chronic diseases and conditions in the elderly). The recent report to the Parliamentary Secretary to the Minister for Health and Ageing of Australia, prepared by the Expert Committee on Complementary Medicines, has identified potential herb–drug interactions as an important area, and encourages more research on the safety of herbal and other complementary therapies.[2]

In this short paper, we have outlined some important aspects of herb–drug interactions in the context of Chinese herbal medicines. It is important for Chinese herbal medicine practitioners to understand these concepts in order to optimise clinical therapies and to avoid potential adverse reactions related to Chinese herbal medicines.

What is a herb–drug interaction?

A herb–drug interaction is defined as any pharmacological modification caused by a herbal substance(s) to another exogenous chemical (e.g. a prescription medication) in the diagnostic, therapeutic, or other action of a drug in or on the body.[3] This relates to so called drug–drug interactions

* Correspondent author; e-mail: chun.guang.li@rmit.edu.au

Aust J Acupunct Chin Med 2007;2(1):17–24.

(interactions between drugs), herb–herb interactions (interactions between herbs) or drug–food interactions (interactions between drugs and food). Broadly speaking, the herb–drug interaction is also a kind of drug interaction, considering that the action of a herbal substance is eventually caused by chemical ingredients which may be known or unknown. For example, St John's Wort (*Hypericum perforatum*), a commonly used antidepressant herb, has been reported to cause significant changes in the action of cyclosporine A in transplant patients (for references, see table 1). It also decreased plasma concentrations of a range of drugs including digoxin,[4] warfarin[5] and theophylline.[6] It should be pointed out that some herb–drug interactions may be beneficial, e.g. enhancing the efficacy or reducing the adverse reactions of an anti-cancer agent. Recently, a randomised clinical trial has demonstrated that Chinese herbal medicine reduces chemotherapy-induced nausea.[7] However, many herb–drug interactions can also be harmful, e.g. causing adverse reactions or therapeutic failure.

Why are we concerned about herb–drug interactions?

The main reason for concern is that herb–drug interactions may potentially affect the clinical safety and efficacy of related drugs or herbs. Although many interactions between herbs and drugs may be too minor (in terms of pharmacokinetic and/or pharmacodynamic changes) to have any clinical significance, in some cases, these interactions may alter the clinical outcomes or the safety of the treatment involved. The risk of harmful herb–drug interactions is of particular concern to both consumers and practitioners of herbal and conventional medicines. There has been an increasing number of reports on harmful herb–drug interactions globally, partly due to the popularity of using herbal products in the general population.[8]

It is important to note that the use of multiple medicines will significantly increase the risk of potential herb–drug interactions, especially in the elderly or certain groups of consumers, such as cancer patients. The risk for drug interactions increases with the number of products consumed. For example, the risk for potential interactions when consuming two products is 6%; five products, 50%; the risk increases to 100% when consuming eight or more products.[9] The likelihood of herb–drug interactions is therefore theoretically higher than drug–drug interactions since most synthetic drugs usually contain a single chemical entity.

It should be pointed out, however, that our understanding of the interactions between herbs and drugs is still limited. It is difficult to characterise and identify definitely a herb–drug interaction based only on case reports or case series studies. Considering a significant number of patients or herbal consumers fail to disclose the use of herbal products to their physicians,[10] and most physicians have relatively limited knowledge of various herbal products, the risk of potential herb–drug interactions is increased. Thus, there have been efforts for implementation of co-ordinated toxicity-monitoring systems by the World Health Organization (WHO) (e.g. WHO Collaborating Centre for International Drug Monitoring, www.who-umc.org), and by various governments, including those of Australia, the United Kingdom, the United States, Singapore and China, aimed at improving monitoring and timely reporting of potential herb–drug interactions.

How do herb–drug interactions occur?

Herb–drug interactions can be caused by various factors. They may result from chemical reactions between different ingredients, or from changes or modifications to specific biochemical pathways involved in the metabolism or actions of related drugs or herbs. For example, certain Chinese herbs may interfere with the body's drug transporters and metabolism enzymes, resulting in changes of the metabolism and consequently the actions of various drugs.

Most herb–drug interactions are mediated by pharmacodynamic and/or pharmacokinetic mechanisms. Pharmacodynamic interactions involve synergistic or antagonistic interactions on the same drug targets, e.g. receptors, which can often be predicted and avoided. For example, Ma Huang (*Ephedra* species) contains ephedrine-like alkaloids which exhibit sympathomimetic activities. Thus, Ma Huang may interact with other sympathomimetic agents, resulting in increased actions of monamine oxidase inhibitors and adrenergic agonists such as clonidine, and decreased actions of bethanidine and guanethidine.[11] Pharmacokinetic interactions are much more difficult to anticipate, as they occur through multiple mechanisms, including alterations of the drug's absorption, distribution, metabolism and excretion. Most reported herb–drug interactions are pharmacokinetic interactions. For example, certain herbal ingredients may inhibit P-glycoprotein-mediated drug transport in the liver and intestinal tract, resulting in changes of absorptions and actions of drugs which are P-glycoprotein substrates.[12,13]

Cytochrome P450 (CYP450) enzymes are the most important drug-metabolising enzymes in the body and are responsible for the metabolism of more than 50% of therapeutic drugs.[14] Herb–drug interactions often occur when CYP450 enzymes are affected. In humans, there are 57 CYP450 isoenzymes, and these are grouped into different classes or families. The nomenclature of CYP450s employs a three-tiered classification based on the conventions of molecular biology, indicated by

an Arabic numeral (family), a capital letter (subfamily) and another Arabic numeral (gene), e.g. CYP1A2.[15] Most drug oxidations are catalysed primarily by six CYP450 enzymes (CYP1A2, 2C9, 2C19, 2D6, 2E1 and 3A4/5). Among these, CYP3A4 is responsible for metabolising more than 50% of drugs which are CYP450 substrates.[14]

The actions of CYP450 may be changed by herbal ingredients through two different mechanisms: induction and inhibition. The induction of CYP450 usually requires a longer period of time (e.g. several days), which may lead to decreased drug plasma levels (through increased drug metabolism), and consequently reduced drug effects. Conversely, the inhibition of CYP450 is usually immediate and may lead to increased drug plasma levels (through decreased drug metabolism), and thus increased drug effects, which may result in significant adverse reactions or toxicities. Many clinical adverse events have been associated with CYP450 inhibitions.

In addition to P450s, there are also other drug metabolism enzymes and transport proteins which may be modulated by herbal substances, such as UDP-glucuronosyltransferase (UGT) enzymes and breast-cancer resistance proteins.

Examples of herb–drug interactions

A number of herb–drug interactions have been identified in humans,[12,16] as shown in Table 1. The reported drugs include warfarin, aspirin, phenprocoumon, midazolam, alprazolam, amitriptyline, oral contraceptives, indinavir, ritonavir, saquinavir, digoxin, cyclosporine, tacrolimus, imatinib and irinotecan.[12] There are also numerous studies on animals or cells indicating potential herb–drug interactions, although the relevance of the evidence to humans has yet to be established.

One of the most commonly reported drugs involved in herb–drug interactions is warfarin. More than 15 different herbs were reported to interfere with warfarin (and related drugs, such as heparin, aspirin, and coumarin derivatives). A number of Chinese herbs may potentially interact with warfarin, to cause bleeding. Such herbs include Ginger (*Zingiber officinale*), Ginseng (*Panax* species), Danshen (*Salvia miltiorrhiza*) and Dang gui (*Angelica sinensis*)[17,18] (Table 1).

One of the most commonly reported herbs involved is St John's Wort (*Hypericum perforatum*), which has been reported to interfere with cyclosporine, digoxin, theophylline, oral contraceptives, methadone, fluoxetine and buspirone (Table 1). For example, a number of cases have been reported showing that St John's Wort decreased cyclosporine blood concentrations.[19-27] *Gingko biloba* was also reported to interact with ibuprofen, trazodone, fluoxetine, buspirone and phenytoin (Table 1). It is interesting to note that both warfarin and cyclosporine are well-known subtracts of CYP2C9 and CYP3A4 respectively. St John's Wort is a potent inducer of CYP3A4 and P-glycoprotein.

Another example is Gancao (licorice, *Glycyrrhiza glabra*), which was reported to increase the plasma concentrations of prednisolone[28,29] by inhibiting the metabolism of prednisolone, and also potentiating the skin vasoconstrictive action of hydrocortisone.[30] Thus, it may potentially modify the pharmacological effects of prednisolone and hydrocortisone.

How to predict the risk of potential herb–drug interactions

Generally speaking, herb–drug interactions are difficult to predict as they depend on a number of factors, including the conditions of a patient, dose and time of administration of drugs and herbs, and quality of herbal substances. Often the individual differences may determine the consequences of a likely herb–drug interaction.

Given the chemical complexity of herbal compositions, it may be easier to predict the potential interactions based on the pharmacological properties of the drug or herb involved (e.g. if the drug or herb has similar or different pharmacodynamic actions, or acts as the substrate or inhibitor/inducer of certain CYP450s or P-glycoprotein). Certain models have been developed to predict potential herb–drug interactions, using pharmacokinetic principles.[16]

It is important to note that herb–drug interactions are likely to be under-reported. Currently, only a small number of drugs and herbs have been tested in clinical trials for potential interactions. Chinese medicine practitioners and physicians should examine prescribed drugs and herbal formulations/products to identify whether any ingredients of concern are involved. They should also monitor clinical signs of the patients for any changes in responses or side effects of administered drugs after taking herbal medicines. The general advice is to avoid the concurrent use of drugs and herbal medicines in certain clinical conditions.

How to report herb–drug interactions in Australia

In Australia, all suspected drug interactions, including suspected adverse reactions to prescription medicines, vaccines, over-the-counter and complementary medicines, should be reported to the Adverse Drug Reactions Unit at the Therapeutic Goods

TABLE 1 Reported Herb–Drug Interactions in Humans

Herb (Latin name)	Drug	Evidence	Reference
St John's Wort (*Hypericum perforatum*)	Cyclosporin	Case reports	19–27, 31–34
		Case series	35, 36
		Clinical trial	37
	Sertraline	Case reports	38, 39
	Oral contraceptives	Case series	40. 41
		Clinical trials	42, 43
	Paroxetine	Case report	44
	Theophylline	Case report	6
	Loperamide	Case report	45
	Nefazodone	Case report	38
	Phenpro-coumon	Case report	34
	Venlaxafine	Case report	46
	Amitriptylin	Clinical trial	47
	Tacrolimus	Clinical trials	48, 49
	Simvastatin	Clinical trial	50
	Imatinib	Clinical trial	51
	Indinavir	Clinical trial	52
	Irenotecan	Clinical trial	53
	R- and S- verapamil	Clinical trial	54
	Midazolam	Clinical trial	55
	Digoxin	Clinical trials	4, 46, 47
	Fexofenadine	Clinical trials	58
	Warfarin	Clinical trial	59
		Case series	5
Ginseng (*Panax* species)	Phenelzine	Case reports	60, 61
	Warfarin	Case reports	62, 63
		Clinical trials	59, 64
American Ginseng**	Warfarin	Clinical trial	65
Danshen (*Salvia miltiorrhiza*)	Warfarin	Case reports	18, 67, 68
Dang gui (*Angelica sinensis*)	Warfarin	Case reports	69, 70
Papaya extract (*Papaya carica*)	Warfarin	Case report	71
Devil's claw (*Harpagophytum procumbens*)	Warfarin	Case report	71
Garlic (*Allium sativum*)	Warfarin	Case report	72
	Saquinavir	Clinical trial	73
	Alprazolam level	Clinical trial	74

TABLE 1 Continued

Herb (Latin name)	Drug	Evidence	Reference
Ginkgo (*Ginkgo biloba*)	Warfarin	Clinical trials*	64, 75, 76
	Warfarin	Case report	77
	Trazodone	Case report	78
	Valerian	Case report	79
	Thiazide diuretic	Case report	80
	Aspirin	Case report	81
	Ibuprofen	Case report	82
	Phenytoin	Case report	83
	Omeprazole	Clinical trial	84
Kava (*Piper methysticum*)	Alprazolam	Case report	85
	Levodopa	Case report	86
Betel nut (*Areca catechu*)	Flupenthixol	Case report	87
	Fluphenazine	Case report	87
Gan Cao**	Digitalis	Case report	88
	Enalapril	Case report	89
Chilli pepper (*Capsicum* species)	ACE inhibitor	Case report	90
FORMULAS: Xiao Chai Hu Tang (sho-saiko-to)	Caffeine	Clinical trial	91
	Prednisolone	Clinical trial	92
FORMULAS: Saiboku-To	Prednisolone	Clinical trial	92
FORMULAS: Sairei-To	Prednisolone	Clinical trial	92

Notes: All clinical trials included in the table demonstrated significant herb–drug interactions, except the one marked with *, which showed no significant interaction between Warfarin and Ginkgo. ** Indicates that the Latin name was not given in the relevant study, meaning that the herb species could not be identified with certainty by the authors of this review.

Administration (TGA) (www.tga.gov.au/adr). Reports can be made electronically at www.tgasime.health.gov.au, or by using the 'Blue Card' pre-paid reporting form (available from www.tga.gov.au/adr), or by calling the Consumer Adverse Medication Events Line (telephone: 1300 134 237). The information to be included in a report is the patient's details, a description of the suspected reaction and medicines involved, as well as any treatment and outcome details (refer to the Blue Card for an information check-list). For complementary medicines, it will be useful to include product information such as AUST L number if possible.

Conclusion

Herb–drug interaction is an important issue affecting the efficacy and safety of therapeutic treatments. Chinese herbal medicine practitioners should have adequate knowledge in this area and adopt proper strategies to monitor and report potential herb–drug interactions in order to minimise harmful adverse reactions and improve the efficacy of Chinese herbal medicines.

References

1. MacLennan AH, Myers SP, Taylor AW. The continuing use of complementary and alternative medicine in South Australia: costs and beliefs in 2004. Med J Aust 2006;184(1):27–31.
2. Expert Committee on Complementary Medicines in the Health System. Complementary Medicines in the Australian Health System. Canberra: Commonwealth of Australia; 2003.
3. Kuhn MA. Herbal remedies: drug–herb interactions. Crit Care Nurse 2002;22(2):22–35.
4. Johne A, Brockmoller J, Bauer S, Maurer A, Langheinrich M, Roots I. Pharmacokinetic interaction of digoxin with an herbal extract from St John's wort (*Hypericum perforatum*). Clin Pharmacol Ther 1999;66(4):338–45.
5. Yue QY, Bergquist C, Gerden B. Safety of St John's wort (*Hypericum perforatum*). Lancet 2000;355(9203):576–7.
6. Nebel A, Schneider BJ, Baker RK, Kroll DJ. Potential metabolic interaction between St John's wort and theophylline. Ann Pharmacother 1999;33(4):502.
7. Mok T, Yeo W, Johnson P, Hui P, Ho W, Lam K et al. A double-blind placebo-controlled randomized study of Chinese herbal medicine as complementary therapy for reduction of chemotherapy-induced toxicity. Ann Oncol 2007;18(4):768–74.
8. Li CG, Monyle K, Xue C. Problems and challenges with Chinese herbal medicine. In: Leung P, Xue C, Cheng Y, editors. A comprehensive guide to Chinese medicine. Singapore: World Scientific; 2003. p. 85–112.
9. Mathewson Kuhn M. Pharmacotherapeutics: a nursing process approach. 4th ed. Philadelphia: FA Davis; 1998.
10. Klepser TB, Doucette WR, Horton MR, Buys LM, Ernst ME, Ford JK et al. Assessment of patients' perceptions and beliefs regarding herbal therapies. Pharmacotherapy 2000;20(1):83–7.
11. Wooltorton E, Sibbald B. Ephedra/ephedrine: cardiovascular and CNS effects. CMAJ 2002;166(5):633.
12. Yang XX, Hu ZP, Duan W, Zhu YZ, Zhou SF. Drug–herb interactions: eliminating toxicity with hard drug design. Curr Pharm Des 2006;12(35):4649–64.
13. Yoshida N, Koizumi M, Adachi I, Kawakami J. Inhibition of P-glycoprotein-mediated transport by terpenoids contained in herbal medicines and natural products. Food Chem Toxicol 2006;44(12):2033–9.
14. Block KI, Gyllenhaal C. Clinical corner: herb–drug interactions in cancer chemotherapy: theoretical concerns regarding drug metabolizing enzymes. Integr Cancer Ther 2002;1(1):83–9.
15. Nebert DW, Nelson DR, Coon MJ, Estabrook RW, Feyereisen R, Fujii-Kuriyama Y et al. The P450 superfamily: update on new sequences, gene mapping, and recommended nomenclature. DNA Cell Biol 1991;10(1):1–14.
16. Zhou S, Huang M, Xu A, Yang H, Duan W, Paxton JW. Prediction of herb–drug metabolic interactions: a simulation study. Phytother Res 2005;19(6):464–71.
17. Heck AM, DeWitt BA, Lukes AL. Potential interactions between alternative therapies and warfarin. Am J Health Syst Pharm 2000;57(13):1221–30.
18. Yu CM, Chan JC, Sanderson JE. Chinese herbs and warfarin potentiation by 'danshen'. J Intern Med 1997;241(4):337–9.
19. Barone GW, Gurley BJ, Ketel BL, Lightfoot ML, Abul-Ezz SR. Drug interaction between St John's wort and cyclosporine. Ann Pharmacother 2000;34(9):1013–16.
20. Mai I, Kruger H, Budde K, Johne A, Brockmoller J, Neumayer HH et al. Hazardous pharmacokinetic interaction of Saint John's wort (*Hypericum perforatum*) with the immunosuppressant cyclosporin. Int J Clin Pharmacol Ther 2000;38(10):500–2.
21. Karliova M, Treichel U, Malago M, Frilling A, Gerken G, Broelsch CE. Interaction of *Hypericum perforatum* (St John's wort) with cyclosporin A metabolism in a patient after liver transplantation. J Hepatol 2000;33(5):853–5.
22. Ruschitzka F, Meier PJ, Turina M, Luscher TF, Noll G. Acute heart transplant rejection due to Saint John's wort. Lancet 2000;355(9203):548–9.
23. Moschella C, Jaber BL. Interaction between cyclosporine and Hypericum perforatum (St John's wort) after organ transplantation. Am J Kidney Dis 2001;38(5):1105–7.
24. Turton-Weeks SM, Barone GW, Gurley BJ, Ketel BL, Lightfoot ML, Abul-Ezz SR. St John's wort: a hidden risk for transplant patients. Prog Transplant 2001;11(2):116–20.
25. Ahmed SM, Banner NR, Dubrey SW. Low cyclosporin: a level due to Saint John's wort in heart transplant patients. J Heart Lung Transplant 2001;20(7):795.
26. Beer AM, Ostermann T. [St John's wort: interaction with cyclosporine increases risk of rejection for the kidney transplant and raises daily cost of medication]. Med Klin (Munich) 2001;96(8):480–3.
27. Alscher DM, Klotz U. Drug interaction of herbal tea containing St John's wort with cyclosporine. Transpl Int 2003;16(7):543–4.
28. Chen MF, Shimada F, Kato H, Yano S, Kanaoka M. Effect of oral administration of glycyrrhizin on the pharmacokinetics of prednisolone. Endocrinol Jpn 1991;38(2):167–74.
29. Chen MF, Shimada F, Kato H, Yano S, Kanaoka M. Effect of glycyrrhizin on the pharmacokinetics of prednisolone following low dosage of prednisolone hemisuccinate. Endocrinol Jpn 1990;37(3):331–41.
30. Teelucksingh S, Mackie AD, Burt D, McIntyre MA, Brett L, Edwards CR. Potentiation of hydrocortisone activity in skin by glycyrrhetinic acid. Lancet 1990;335(8697):1060–3.
31. Barone GW, Gurley BJ, Ketel BL, Abul-Ezz SR. Herbal supplements: a potential for drug interactions in transplant recipients. Transplantation 2001;71(2):239–41.
32. Rey JM, Walter G. *Hypericum perforatum* (St John's wort) in depression: pest or blessing? Med J Aust 1998;169(11–12):583–6.
33. Bon S, Hartmann K, Johanniskraut KM. Ein Enzyminduktor? Schweiz Apoth Ztg 1999;16:535–6.
34. Gordon JB. SSRIs and St John's wort: possible toxicity? Am Fam Physician 1998;57(5):950–3.
35. Breidenbach T, Hoffmann MW, Becker T, Schlitt H, Klempnauer J. Drug interaction of St John's wort with cyclosporin. Lancet 2000;355(9218):1912.
36. Breidenbach T, Kliem V, Burg M, Radermacher J, Hoffmann MW, Klempnauer J. Profound drop of cyclosporin A whole blood trough levels caused by St John's wort (*Hypericum perforatum*). Transplantation 2000;69(10):2229–30.
37. Bauer S, Stormer E, Johne A, Kruger H, Budde K, Neumayer HH et al. Alterations in cyclosporin A pharmacokinetics and metabolism during treatment with St John's wort in renal transplant patients. Br J Clin Pharmacol 2003;55(2):203–11.
38. Lantz MS, Buchalter E, Giambanco V. St John's wort and antidepressant drug interactions in the elderly. J Geriatr Psychiatry Neurol 1999;12(1):7–10.

39. Barbenel DM, Yusufi B, O'Shea D, Bench CJ. Mania in a patient receiving testosterone replacement postorchidectomy taking St John's wort and sertraline. J Psychopharmacol 2000;14(1):84–6.
40. Ratz AE, von Moos M, Drewe J. [St John's wort: a pharmaceutical with potentially dangerous interactions]. Schweiz Rundsch Med Prax 2001;90(19):843–9.
41. Schwarz UI, Buschel B, Kirch W. Unwanted pregnancy on self-medication with St John's wort despite hormonal contraception. Br J Clin Pharmacol 2003;55(1):112–3.
42. Hall SD, Wang Z, Huang SM, Hamman MA, Vasavada N, Adigun AQ et al. The interaction between St John's wort and an oral contraceptive. Clin Pharmacol Ther 2003;74(6):525–35.
43. Murphy PA, Kern SE, Stanczyk FZ, Westhoff CL. Interaction of St John's wort with oral contraceptives: effects on the pharmacokinetics of norethindrone and ethinyl estradiol, ovarian activity and breakthrough bleeding. Contraception 2005;71(6):402–8.
44. Waksman JC, Heard K, Jolliff H, Daly FFS, Bogdan GM, Dart RC. Serotonin syndrome associated with the use of St John's wort (*Hypericum perforatum*) and paroxetine [Abstract]. Clin Toxicol 2000;38(5):521.
45. Khawaja IS, Marotta RF, Lippmann S. Herbal medicines as a factor in delirium. Psychiatr Serv 1999;50(7):969–70.
46. Prost N, Tichadou L, Rodor F, Nguyen N, David JM, Jean-Pastor MJ. [St Johns wort–venlafaxine interaction]. Presse Med 2000;29(23):1285–6.
47. Johne A, Schmider J, Brockmoller J, Stadelmann AM, Stormer E, Bauer S et al. Decreased plasma levels of amitriptyline and its metabolites on comedication with an extract from St John's wort (*Hypericum perforatum*). J Clin Psychopharmacol 2002;22(1):46–54.
48. Hebert MF, Park JM, Chen YL, Akhtar S, Larson AM. Effects of St John's wort (*Hypericum perforatum*) on tacrolimus pharmacokinetics in healthy volunteers. J Clin Pharmacol 2004;44(1):89–94.
49. Mai I, Stormer E, Bauer S, Kruger H, Budde K, Roots I. Impact of St John's wort treatment on the pharmacokinetics of tacrolimus and mycophenolic acid in renal transplant patients. Nephrol Dial Transplant 2003;18(4):819–22.
50. Sugimoto K, Ohmori M, Tsuruoka S, Nishiki K, Kawaguchi A, Harada K et al. Different effects of St John's wort on the pharmacokinetics of simvastatin and pravastatin. Clin Pharmacol Ther 2001;70(6):518–24.
51. Frye RF, Fitzgerald SM, Lagattuta TF, Hruska MW, Egorin MJ. Effect of St John's wort on imatinib mesylate pharmacokinetics. Clin Pharmacol Ther 2004;76(4):323–9.
52. Piscitelli SC, Burstein AH, Chaitt D, Alfaro RM, Falloon J. Indinavir concentrations and St John's wort. Lancet 2000;355(9203):547–8.
53. Mathijssen RH, Verweij J, de Bruijn P, Loos WJ, Sparreboom A. Effects of St John's wort on irinotecan metabolism. J Natl Cancer Inst 2002;94(16):1247–9.
54. Tannergren C, Engman H, Knutson L, Hedeland M, Bondesson U, Lennernas H. St John's wort decreases the bioavailability of R- and S-verapamil through induction of the first-pass metabolism. Clin Pharmacol Ther 2004;75(4):298–309.
55. Mueller SC, Majcher-Peszynska J, Uehleke B, Klammt S, Mundkowski RG, Miekisch W et al. The extent of induction of CYP3A by St John's wort varies among products and is linked to hyperforin dose. Eur J Clin Pharmacol 2006;62(1):29–36.
56. Durr D, Stieger B, Kullak-Ublick GA, Rentsch KM, Steinert HC, Meier PJ et al. St John's wort induces intestinal P-glycoprotein/MDR1 and intestinal and hepatic CYP3A4. Clin Pharmacol Ther 2000;68(6):598–604.
57. Mueller SC, Uehleke B, Woehling H, Petzsch M, Majcher-Peszynska J, Hehl EM et al. Effect of St John's wort dose and preparations on the pharmacokinetics of digoxin. Clin Pharmacol Ther 2004;75(6):546–57.
58. Wang Z, Hamman MA, Huang SM, Lesko LJ, Hall SD. Effect of St John's wort on the pharmacokinetics of fexofenadine. Clin Pharmacol Ther 2002;71(6):414–20.
59. Jiang X, Williams KM, Liauw WS, Ammit AJ, Roufogalis BD, Duke CC et al. Effect of St John's wort and ginseng on the pharmacokinetics and pharmacodynamics of warfarin in healthy subjects. Br J Clin Pharmacol 2004;57(5):592–9.
60. Shader RI, Greenblatt DJ. Phenelzine and the dream machine: ramblings and reflections. J Clin Psychopharmacol 1985;5(2):65.
61. Jones BD, Runikis AM. Interaction of ginseng with phenelzine. J Clin Psychopharmacol 1987;7(3):201–2.
62. Janetzky K, Morreale AP. Probable interaction between warfarin and ginseng. Am J Health Syst Pharm 1997;54(6):692–3.
63. Rosado MF. Thrombosis of a prosthetic aortic valve disclosing a hazardous interaction between warfarin and a commercial ginseng product. Cardiology 2003;99(2):111.
64. Jiang X, Blair EY, McLachlan AJ. Investigation of the effects of herbal medicines on warfarin response in healthy subjects: a population pharmacokinetic–pharmacodynamic modeling approach. J Clin Pharmacol 2006;46(11):1370–8.
65. Yuan CS, Wei G, Dey L, Karrison T, Nahlik L, Maleckar S et al. American ginseng reduces warfarin's effect in healthy patients: a randomized, controlled trial [Brief communication]. Ann Intern Med 2004;141(1):23–7.
66. McRae S. Elevated serum digoxin levels in a patient taking digoxin and Siberian ginseng. CMAJ 1996;155(3):293–5.
67. Tam LS, Chan TY, Leung WK, Critchley JA. Warfarin interactions with Chinese traditional medicines: danshen and methyl salicylate medicated oil. Aust NZ J Med 1995;25(3):258.
68. Izzat MB, Yim AP, El-Zufari MH. A taste of Chinese medicine! Ann Thorac Surg 1998;66(3):941–2.
69. Page RL, 2nd, Lawrence JD. Potentiation of warfarin by dong quai. Pharmacotherapy 1999;19(7):870–6.
70. Ellis GR, Stephens MR. Untitled (photograph and brief case report). In 'Minerva'. BMJ 1999;319(7210):650.
71. Shaw D, Leon C, Kolev S, Murray V. Traditional remedies and food supplements: a 5-year toxicological study (1991–1995). Drug Saf 1997;17(5):342–56.
72. Sunter WH. Warfarin and garlic [Letter]. Pharm J 1991;246:722.
73. Piscitelli SC, Burstein AH, Welden N, Gallicano KD, Falloon J. The effect of garlic supplements on the pharmacokinetics of saquinavir. Clin Infect Dis 2002;34(2):234–8.
74. Markowitz JS, Devane CL, Chavin KD, Taylor RM, Ruan Y, Donovan JL. Effects of garlic (*Allium sativum* L.) supplementation on cytochrome P450 2D6 and 3A4 activity in healthy volunteers. Clin Pharmacol Ther 2003;74(2):170–7.
75. Jiang X, Williams KM, Liauw WS, Ammit AJ, Roufogalis BD, Duke CC et al. Effect of ginkgo and ginger on the pharmacokinetics and pharmacodynamics of warfarin in healthy subjects. Br J Clin Pharmacol 2005;59(4):425–32.

76. Engelsen J, Nielsen JD, Hansen KF. [Effect of coenzyme Q10 and *Ginkgo biloba* on warfarin dosage in patients on long-term warfarin treatment. A randomized, double-blind, placebo-controlled cross-over trial]. Ugeskr Laeger 2003;165(18):1868–71.

77. Matthews MK, Jr. Association of *Ginkgo biloba* with intracerebral hemorrhage. Neurology 1998;50(6):1933–4.

78. Galluzzi S, Zanetti O, Binetti G, Trabucchi M, Frisoni GB. Coma in a patient with Alzheimer's disease taking low dose trazodone and *Gingko biloba*. J Neurol Neurosurg Psychiatry 2000;68(5):679–80.

79. Chen D, Klesmer J, Giovanniello A, Katz J. Mental status changes in an alcohol abuser taking valerian and *Gingko biloba*. Am J Addict 2002;11(1):75–7.

80. Izzo AA, Di Carlo G, Borrelli F, Ernst E. Cardiovascular pharmacotherapy and herbal medicines: the risk of drug interaction. Int J Cardiol 2005;98(1):1–14.

81. Rosenblatt M, Mindel J. Spontaneous hyphema associated with ingestion of *Ginkgo biloba* extract. N Engl J Med 1997;336(15):1108.

82. Meisel C, Johne A, Roots I. Fatal intracerebral mass bleeding associated with *Ginkgo biloba* and ibuprofen. Atherosclerosis 2003;167(2):367.

83. Kupiec T, Raj V. Fatal seizures due to potential herb–drug interactions with *Ginkgo biloba*. J Anal Toxicol 2005;29(7):755–8.

84. Yin OQ, Tomlinson B, Waye MM, Chow AH, Chow MS. Pharmacogenetics and herb–drug interactions: experience with *Ginkgo biloba* and omeprazole. Pharmacogenetics 2004;14(12):841–50.

85. Almeida JC, Grimsley EW. Coma from the health food store: interaction between kava and alprazolam. Ann Intern Med 1996;125(11):940–1.

86. Schelosky L, Raffauf C, Jendroska K, Poewe W. Kava and dopamine antagonism. J Neurol Neurosurg Psychiatry 1995;58(5):639–40.

87. Deahl M. Betel nut-induced extrapyramidal syndrome: an unusual drug interaction. Mov Disord 1989;4(4):330–2.

88. Harada T, Ohtaki E, Misu K, Sumiyoshi T, Hosoda S. Congestive heart failure caused by digitalis toxicity in an elderly man taking a licorice-containing Chinese herbal laxative. Cardiology 2002;98(4):218.

89. Iida R, Otsuka Y, Matsumoto K, Kuriyama S, Hosoya T. Pseudoaldosteronism due to the concurrent use of two herbal medicines containing glycyrrhizin: interaction of glycyrrhizin with angiotensin-converting enzyme inhibitor. Clin Exp Nephrol 2006;10(2):131–5.

90. Hakas JF, Jr. Topical capsaicin induces cough in patient receiving ACE inhibitor. Ann Allergy 1990;65(4):322–3.

91. Saruwatari J, Nakagawa K, Shindo J, Nachi S, Echizen H, Ishizaki T. The in-vivo effects of sho-saiko-to, a traditional Chinese herbal medicine, on two cytochrome P450 enzymes (1A2 and 3A) and xanthine oxidase in man. J Pharm Pharmacol 2003;55(11):1553–9.

92. Homma M, Oka K, Ikeshima K, Takahashi N, Niitsuma T, Fukuda T et al. Different effects of traditional Chinese medicines containing similar herbal constituents on prednisolone pharmacokinetics. J Pharm Pharmacol 1995;47(8):687–92.

Acupuncture and Acupressure for Pain Management in Labour: A Systematic Review

Caroline Smith*[1] PhD
Carmel T Collins[2] PhD
Caroline Crowther[1] FRANZCOG

1. Discipline of Obstetrics and Gynaecology, The University of Adelaide, Australia
2. Child Health Research Institute, Adelaide, Australia; Discipline of Paediatrics, The University of Adelaide, Australia; Australian School of Nursing and Midwifery, The University of South Australia

This paper is based on a Cochrane Review published in The Cochrane Library 2006, Issue 4. Cochrane Reviews are regularly updated as new evidence emerges and in response to feedback, and The Cochrane Library should be consulted for the most recent version of the review (see www.thecochranelibrary.com for information).

ABSTRACT

Background: Many women would like to avoid pharmacological or invasive methods of pain management in labour and this may contribute towards the popularity of complementary methods of pain management. The aim of the review is to examine the effects of acupuncture and acupressure for pain management in labour on maternal and perinatal morbidity. Methods: *Design:* Systematic review of published and unpublished randomised, controlled trials. *Subjects:* Women, whether primiparous or multiparous, and in spontaneous or induced labour, in the first and second stage of labour. *Interventions:* Acupuncture and acupuncture compared to placebo, no treatment or pharmacological forms of pain management in labour. *Outcomes measured:* Maternal satisfaction, use of pharmacological pain relief and maternal and neonatal outcomes. Results: Five trials were included in the review. Three trials involved acupuncture (n = 496 women) and two trials acupressure (n = 172 women). Women receiving acupressure reported less anxiety compared with women in the control group (WMD –1.40, 95% CI –2.51 to 0.29). A difference in labour pain was found in one acupressure trial in the active labour phase (WMD –2.12, 95% CI –3.65 to –0.59). The trials of acupuncture showed a decreased need for pain relief (RR 0.70, 95% CI 0.49 to 1.00). There was a benefit from acupuncture with a reduced need for augmentation in one trial (RR 0.40, 95% CI 0.23 to 0.69). Conclusions: Acupuncture may be beneficial for the management of pain during labour; however, the number of women studied has been small.

KEYWORDS acupuncture, acupressure, pain management, labour.

* Correspondent author; e-mail: caroline.a.smith@adelaide.edu.au

Aust J Acupunct Chin Med 2007;2(1):25–32.

Introduction

Labour presents a physiological and psychological challenge for women. As labour becomes more imminent this can be a time of conflicting emotions; fear and apprehension can be coupled with excitement and happiness. Tension, anxiety and fear are factors contributing towards women's perception of pain and may also affect their labour and birth experience. Pain associated with labour has been described as one of the most intense forms of pain that can be experienced.[1] Pain experienced by women in labour is caused by uterine contractions, the dilatation of the cervix and, in the late first stage and second stage, by stretching of the vagina and pelvic floor to accommodate the baby. However, the complete removal of pain does not necessarily mean a more satisfying birth experience for women.[2] Effective and satisfactory pain management needs to be individualised for each woman.

The use of complementary and alternative medicine (CAM) has become popular with consumers worldwide. Studies suggest that between 30% and 50% of adults in industrialised nations use some form of CAM to prevent or treat health-related problems.[3] Complementary therapies are more commonly used by women of reproductive age, with almost half (49%) reporting use.[4] It is possible that a significant proportion of women are using these therapies during pregnancy. Many women would like to avoid pharmacological or invasive methods of pain relief in labour and this may contribute towards the popularity of complementary methods of pain management.[5]

Acupuncture has an established tradition of treating pain. Several theories have been presented as to exactly how acupuncture works. One theory proposes that pain impulses are blocked from reaching the spinal cord or brain at various 'gates' to these areas.[6] Since the majority of acupuncture points are either connected to, or located near, neural structures, this suggests that acupuncture stimulates the nervous system. Another theory suggests that acupuncture stimulates the body to produce endorphins, which reduce pain.[7] Other pain-relieving substances called opioids may be released into the body during acupuncture treatment.[8] This review focuses on evaluating the evidence to assess the efficacy of acupuncture and acupressure for pain management in labour. This systematic review forms part of a Cochrane Review of complementary and alternative therapies for pain management in labour and readers may wish to refer to the Cochrane Review for evidence on other complementary therapies for pain management in labour.[9]

Methods

OBJECTIVES

To examine the effects of acupuncture and acupressure for pain management in labour on maternal and perinatal morbidity.

This review examines the following hypotheses:

1. That the use of acupuncture and acupressure is an effective means of pain management in labour as measured by decreases in women's rating of labour pain and a reduced need for pharmacological intervention;
2. That the use of acupuncture and acupressure improves maternal satisfaction or maternal emotional experience; and
3. That acupuncture and acupressure have no adverse effects on the mother (e.g. duration of labour, mode of delivery) or baby.

CRITERIA FOR CONSIDERING STUDIES FOR THIS REVIEW

TYPES OF STUDIES

All published and unpublished, randomised and quasi-randomised, controlled trials.

TYPES OF PARTICIPANTS

All women, whether primiparous or multiparous, and in spontaneous or induced labour, in the first and second stage of labour.

TYPES OF INTERVENTIONS

Acupuncture or acupressure used in labour with or without concurrent use of pharmacological or non-pharmacological interventions compared with placebo, no treatment or pharmacological forms of pain management.

TYPES OF OUTCOME MEASURES

Primary

1. Maternal satisfaction or maternal emotional experience with pain management in labour.
2. Use of pharmacological pain relief in labour.

Secondary

Maternal: Length of labour; mode of delivery; instrumental vaginal delivery; need for augmentation with oxytocin; perineal trauma (defined as episiotomy and incidence of second- or third-degree tear); maternal blood loss (post-partum haemorrhage defined as greater than 600 mL); perception of pain experienced; satisfaction with general birth experience; assessment of mother–baby interaction; and breastfeeding at hospital discharge.

Neonatal: Apgar score less than seven at five minutes; admission to neonatal intensive care unit; need for mechanical ventilation; neonatal encephalopathy.

SEARCH STRATEGY FOR IDENTIFICATION OF STUDIES

We searched the Cochrane Pregnancy and Childbirth Group's Trials Register (February 2006). In addition, we searched the Cochrane Central Register of Controlled Trials, MEDLINE, CINAHL and EMBASE from inception to February 2006. The subject headings included obstetrics, labor, birth, pain. The text words included: 'acupuncture, acupressure'. We did not apply any language restrictions.

We evaluated trials for their appropriateness for inclusion. Where there was uncertainty about inclusion of the study, the full text was retrieved. If there was disagreement between review authors about the studies to be included that could not be resolved by discussion, assistance from the third review author was sought. Reasons for excluding trials have been stated. Following an assessment for inclusion, we assessed the methodology of the trial. Caroline Smith and Carmel Collins extracted the data and assessed the quality. Two review authors assessed and extracted data for each trial.

Included trials were assessed according to the following five main criteria:

1. Adequate concealment of treatment allocation (e.g. opaque, sealed, numbered envelopes);
2. Method of allocation to treatment (e.g. computer randomisation, random-number tables);
3. Adequate documentation of how exclusions were handled after treatment allocation (to facilitate intention-to-treat analysis); and
4. Adequate blinding of outcome assessment.

Letters were used to indicate the quality of the included trials,[10] for example:

1. ***A*** was used to indicate a trial that had a high level of quality in which all the criteria were met;
2. ***B*** was used to indicate that one or more criteria were partially met or it was unclear if all the criteria were met; and
3. ***C*** was used if one or more criteria were not met.

We entered data directly from the published reports into the Review Manager software[11] with double data entry performed by a co-author (Carmel Collins). Where data were not presented in a suitable format for data entry, or if data were missing, we sought additional information from the trialists by personal communication in the form of a letter or e-mail.

Data extracted from the trials were analysed on an intention-to-treat basis (when this was not done in the original report, re-analysis was performed if possible). Where data were missing, we sought clarification from the original authors. Statistical analysis was performed using the Review Manager software.[11] For dichotomous data, we calculated relative risks and 95% confidence intervals (95% CI). We calculated weighted mean difference and 95% CIs for continuous data. A sensitivity analysis was undertaken on trials with a loss to follow up of 25% or greater. We tested for heterogeneity between trials using the I^2 statistic. Where significant heterogeneity was present (>50%), we used a random-effects model. No trials reported outcomes by parity and therefore no subgroup analyses by parity were undertaken.

DESCRIPTION OF STUDIES

We identified nine randomised, controlled trials that involved acupuncture or acupressure for pain management in labour. Five of these trials (involving 658 women) met the inclusion criteria for this review and were included, and four trials were excluded. Details of the included trials are described in Table 1.

Four trials of acupuncture were excluded. Li[12] evaluated the effect of two acupuncture points on the strength and timing of uterine contractions following acupuncture. This trial did not report on any primary outcomes relevant to this review by study group. Shalev[13] recruited twenty-five women in labour at a maternity hospital in Israel. Thirteen women were randomised to receive electroacupuncture and 12 women received no analgesia at the start of the active phase of labour (cervical dilatation = 4 cm, effacement = 60%). The study reported on beta-endorphin levels and did not report on any measures relevant to this review. Shang[14] examined the effect of acupuncture on LI4 *Hegu* point in relation to the length of the second stage of labour and the amount of post-partum bleeding in 161 women. This study was excluded as it did not examine the effect on pain relief. For Ternov,[15] we were unable to establish whether the study design was quasi-random or a controlled clinical trial.

METHODOLOGICAL QUALITY OF INCLUDED STUDIES

ALLOCATION CONCEALMENT

The trials of acupuncture were coded A.[18-20] The two acupressure trials were coded B due to unclear concealment.

METHOD OF ALLOCATION

The method of allocation was adequately reported in four trials. Nesheim[18] used a computer-generated sequence, Ramnerö[19] used card-shuffling; the Chung trial used coin-tossing[16]; Skilnand used lot-drawing[20]; the allocation was open in the Lee trial.[17]

BLINDING

Participants were not blind in the Chung and Skilnand trials,[16,20] but the outcome assessors were. For the remaining trials it was impossible for the therapist to be blind. In the Lee trial the participant, care providers and outcome assessors were

TABLE 1 Characteristics of inluded studies

Study	Methods	Participants
Chung et al.[16]	Single-blind, randomised, controlled trial of acupressure, effleurage and a control group. The randomisation allocation sequence was by coin-tossing; participants were sequentially numbered; the allocation sequence was unclear. It was not feasible for the participant and therapist to be blind to their group allocation. The outcome assessors were blind to women's group allocation, but unclear for the analyst.	127 women participated in the trial during their first stage of labour. Participants needed to be between 37 and 42 weeks pregnant, a low-risk pregnancy, singleton pregnancy and able to speak Chinese. Women who were induced with oxytocin, or received an epidural block or who planned a caesarean section were excluded from the study. The trial was undertaken in Taiwan, no other details were reported.
Lee et al.[17]	Single-blind, randomised, controlled trial of acupressure or touch control. The randomisation sequence was generated from random-number tables; the allocation concealment sequence was open. The participants and outcome assessors were blind to group allocation.	89 women were randomly allocated to the trial. Inclusion criteria for the study were: greater than 37 weeks pregnant, singleton pregnancy, planning a vaginal delivery and in good health. Women were recruited to the study from publicity materials in the outpatient department of a general hospital in South Korea.
Nesheim et al.[18]	A single-blind, controlled trial of acupuncture versus standard care. The allocation sequence was computer-generated and was concealed in opaque envelopes that were numbered consecutively. Participants and the therapist were not blind.	198 women were enrolled into the trial of acupuncture versus standard care. Women were recruited to the trial who were at term, experiencing regular contractions and had an ability to speak Norwegian. Women were excluded if their labour was induced, they were planning a caesarean section, they were planning to request an epidural block, an epidural was required for medical reasons, or they were experiencing any infectious diseases.
Ramnerö et al.[19]	Parallel single-blind, randomised, controlled trial of acupuncture. The trial was stratified by parity. Women received acupuncture or no acupuncture. The randomisation sequence used shuffled cards and were concealed in sealed, opaque envelopes. The outcome assessor was not blind and it was unclear if the analyst was blind to treatment allocation.	100 women were recruited from an ante-natal clinic in Sweden. Randomisation took place in the delivery suite following admission. Inclusion criteria: 37 or more weeks gestation, spontaneous labour, cephalic presentation, cervical dilatation less than 7 cm at admission. Exclusion criteria: diabetes, pre-eclampsia, kidney disease, thrombocytopenia, psychological distress or anorexia, infectious blood disease, atopic eczema or psoriasis.
Skilnand et al.[20]	Single-blind, randomised, controlled trial of acupuncture versus minimal acupuncture. Randomisation was assigned by drawing lots and sealed in opaque envelopes. Women were blind to their group allocation and study personnel collecting data were unaware of women's study group allocation.	210 women were recruited from the maternity ward of a hospital in Norway. Women with a singleton pregnancy, cephalic presentation and in spontaneous active labour met the inclusion criteria. 110 women refused to participate in the trial.

Interventions	Outcomes	Notes	AC[a]
Trained midwives administered the acupressure to women. The intervention lasted 20 min, consisting of 5 min of pressure to points LI4 and BL67. Five cycles of acupressure were completed in 5 min, with each cycle comprising 10 s of sustained pressure and 2 s of rest without pressure. A protocol was established to control finger pressure, accuracy of points and accuracy of technique. For the effleurage group, the left and right upper arms were massaged for 10 min. In the control group, the midwife stayed with the participant for 20 min, taking notes or talking with the participant or family members.	A VAS scale was used to measure the intensity of labour pain. This was administered before and after the intervention. Qualitative data were also collected on women's experiences of labour pain 1–2 h after delivery. The frequency and intensity of uterine contractions were measured from electronic foetal monitors.	There was no power analysis. 23 (18%) women withdrew from the study due to a need for a caesarean section or pain medication. An intention-to-treat analysis was not performed.	B
Women allocated to the intervention group received acupressure at SP6, or to the control group, touch at SP6. Acupressure was applied to SP6 bilaterally during each contraction The pressure applied was 2150 mmHg. The control group received touch with no pressure from the thumbs.	Pain was measured along a VAS and assessed at entry, before the intervention was administered, after the intervention, and 30 and 60 min after the intervention. Other outcomes included duration of labour, use of pain relief, and maternal anxiety.	No power analysis was reported. 14 (15%) women did not complete the study. An intention-to-treat analysis was performed.	B
8 midwives were educated and trained to practise acupuncture for the trial. All women received other analgesics on demand. The acupuncture points used were selected based on the participants' needs and included points BL32, GV20, BL60, BL62, HT7, LR3, GB34, CV4, LI10, 11, BL23, 27, 28, 32, LI4, SP6, PC6,7, ST36. Deqi was obtained. Needles were left in place for 10–20 min or removed after the needling sensation was obtained, or taped and left in place. Women in the control group received conventional care.	Clinical outcomes included use of meperidine, use of other analgesics, duration of labour, mode of delivery and Apgar score. Participants also rated their pain relief along a VAS scale and were asked to report any side-effects from the treatment.	A power analysis was undertaken. There was one drop-out in the acupuncture group and 6 missing records. An intention-to-treat analysis was performed.	A
All women had access to conventional analgesia. Eleven midwives completed a four-day course in acupuncture for labour pain. These midwives administered acupuncture to the treatment group. Acupuncture treatment was individualised with relaxing points combined with local and distal analgesic points. Needles were inserted at 45 or 90 degrees, stimulated manually until Deqi was obtained. Needles were left in situ and removed after 1–3 h.	Pain intensity and degree of relaxation were assessed once every hour, prior to any analgesic and 15 min after. Other outcomes included the use of analgesics, augmentation of labour with oxytocin, duration of labour, outcome of birth, ante-partum haemorrhage, Apgar scores, and infant birth-weight.	10 (10%) women were excluded from the analysis after not meeting the inclusion criteria (breech presentation, not in active labour, not in spontaneous labour, missing pain and relaxation data). No sample-size calculation was described. An intention-to-treat analysis was performed.	A
Real acupuncture followed a treatment protocol. The protocol specified obtaining the Deqi sensation, needles were taped and left in place until delivery or until conventional analgesics were required. Acupuncture points included HT7, LU7, ST30, 29, GB34, ST36, SP8, 6, KI3, GB41, LR3, GV20, BL34, 32, LI4, BL67, 60. Minimal acupuncture involved the same procedure, but needles were inserted away from the meridians. Some needles were removed after 20 min if insufficient pain relief was provided by the treatment and control interventions. Conventional pain relief was made available. Midwives providing the intervention had received formal training in acupuncture.	Pain was assessed along a 10 cm VAS, recorded at 30 min, 1 h and 2 h after treatment, the need for conventional pain relief and use of oxytocin.	Two women were excluded from the control group because they delivered prior to the intervention being administered. No power analysis was reported.	A

[a] Allocation concealment

blind to their group allocation; the analyst was not blind to the group allocation.[17] In the Ramnerö trial the outcome assessors and analyst were not blind.[19] There was no blinding in the Nesheim trial.[18]

INTENTION-TO-TREAT ANALYSIS

Two trials reported an intention-to-treat analysis.[18,19] The remaining trials did not report whether they performed an intention-to-treat analysis but an intention-to-treat analysis was performed. An intention-to-treat analysis was not undertaken in the Chung trial.[16]

LOSSES TO FOLLOW UP

In the Chung acupressure trial, 23 women withdrew.[16] In the acupuncture trials one woman dropped out of the acupuncture group and six records were missing in the control group of the Nesheim trial.[18] Two women were excluded after being randomised due to birth prior to administration of the intervention in the Skilnand trial.[20] In the Ramnerö trial, 10 women (10%) were lost to follow up because they were not eligible after randomisation.[19] Fifteen percent loss to follow up was reported in the Lee trial.[17]

Results

ACUPRESSURE

In the Chung trial,[16] no data were presented on the primary outcomes. Data were presented on one secondary outcome relating to women's perceptions of pain experienced (97 women). The trial reported on pain during the first stage of labour, latent, active and transitional. No difference between groups in labour pain was found during the transitional and latent phases (no overall measure reported). A difference in the active labour phase was found between the acupressure and control group (weighted mean difference, WMD –2.12, 95% CI –3.65 to –0.59). Other outcomes included uterine contractions (raw data not provided) and no differences were found between groups.

The Lee trial[17] compared acupressure with a sham control. The trial reported on two primary outcomes (75 women). Women receiving acupressure reported less anxiety compared with women in the control group (75 women) (WMD –1.40, 95% CI –2.51 to 0.29). There was no difference seen between groups in use of pain relief (relative risk, RR 0.54, 95% CI 0.20 to 1.43, 75 women). Length of active labour to birth was significantly shorter in the acupressure groups (WMD –52.60 min, 95% CI 85.77 to –19.43).

ACUPUNCTURE

ACUPUNCTURE VERSUS NO TREATMENT

Two trials with 288 women were included for the comparison between acupuncture and no treatment.[18,19]

Primary outcomes

(Maternal satisfaction and maternal experience of labour)

Ramnerö found no difference in maternal satisfaction of pain management between the acupuncture and control group (RR 1.08, 95% CI 0.95 to 1.22, 90 women).[19]

In a meta-analysis of 288 women, significant heterogeneity was indicated by the I^2 statistic and a random-effects model was applied; use of pharmacological pain relief was greater in the control group (RR 0.70, 95% CI 0.49 to 1.00). Nesheim reported women in the acupuncture group used less pharmacological pain relief compared to women in the control

TABLE 2 Use of pharmacological pain relief in labour

Review: Acupuncture for pain management in labour
Comparison: 01 Acupuncture compared with control
Outcome: 01 Use of pharmacological analgesia

Study or sub-category	Acu. n/N	No acu. n/N	RR (random) 95% CI	Weight %	RR (random) 95% CI
Ramnerö et al.[19]	20/46	34/44		40.18	0.56 [0.39, 0.81]
Neisham et al.[18]	70/106	75/92		59.82	0.81 [0.69, 0.96]
Total (95% CI)	152	136		100.00	0.70 [0.49, 1.00]

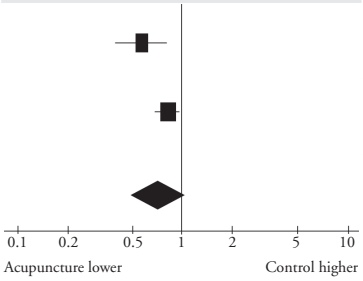

Total events: 90 (acupuncture), 109 (no acupuncture)
Test for heterogeneity: $Chi^2 = 3.33$, df = 1 ($P = 0.07$), $I^2 = 70.0\%$
Test for overall effect: Z = 1.94 ($P = 0.05$)

group (RR 0.81, 95% CI 0.69 to 0.96).[18] Ramnerö reported 20 women (43%) who received acupuncture required no additional analgesic, compared with 34 women (72%) in the control group (RR 0.56, 95% CI 0.39 to 0.81).[19]

Secondary outcomes

Data on instrumental delivery were available from the Nesheim[18] and Ramnerö[19] trials (288 women). There was no difference in the occurrence of an instrumental delivery between groups (RR 0.95, 95% CI 0.45 to 2.00). Data from Ramnerö reported on 90 women and found no difference in spontaneous vaginal delivery (RR 0.98, 95% CI 0.89 to 1.08), caesarean section (RR 0.96, 95% CI 0.06 to 14.83), the length of labour (WMD –0.30, 95% CI –1.79 to 1.19) and women's assessment of pain intensity (WMD –0.20, 95% CI –0.80 to 0.40) between groups.[19] The acupuncture group reported significantly more relaxation than the control group (WMD –0.90, 95% CI –1.62 to –0.18).

Both trials reported on one neonatal outcome; Ramnerö found no infants in either group had an Apgar score of less than seven at five minutes,[19] and in the Nesheim study, one infant in the acupuncture group had an Apgar score less than eight at five minutes (RR 2.61, 95% CI 0.11 to 63.24).[18]

Other outcomes (not prespecified)

Nesheim reported on two other outcomes.[18] Women in the treatment group were asked to complete a visual analogue scale (scale not reported); the median pain relief indicated was 5, and 89 women also indicated they would use acupuncture again in another labour.

ACUPUNCTURE VERSUS MINIMAL ACUPUNCTURE

One trial including 208 women evaluated the effect of acupuncture versus minimal acupuncture.[20]

Primary outcome (208 women)
(Use of pharmacological pain relief in labour)

The need for pharmacological pain relief in labour was reduced for women in the acupuncture group compared with the control (RR 0.72, 95% CI 0.58 to 0.88).

Secondary outcomes (208 women)

There was a benefit from acupuncture with a reduced need for augmentation (RR 0.40, 95% CI 0.23 to 0.69). No difference was found between groups in spontaneous vaginal delivery (RR 1.06, 95% CI 0.96 to 1.18), instrumental delivery (RR 0.64, 95% CI 0.27 to 1.50), caesarean section (RR 0.72, 95% CI 0.17 to 3.15) and Apgar score less than seven at five minutes (RR 0.32, 95% CI 0.01 to 7.79). Length of labour was significantly in favour of acupuncture (WMD 71 fewer minutes, 95% CI –123.70 to –18.30).

Discussion

Most trials were small and of poor methodological quality or inadequately reported. The insufficient reporting made the assessment of methodological quality and data extraction difficult. Overall, the quality of the acupuncture trials was higher than acupressure trials. The sample sizes were small and there may have been a lack of power to demonstrate any statistical significance, if present. The heterogeneity reported for the acupuncture trials may be explained by variation in the design of the treatment interventions including techniques and the duration of the intervention. Overall, the clinical implications of the studies are limited by the inclusion of few clinical outcomes.

ACUPRESSURE

There is insufficient evidence about the effectiveness of acupressure on pain management and further research is required.

ACUPUNCTURE

Evidence from the three trials included in the review[18-20] suggest women receiving acupuncture required less analgesia, including the need for epidural analgesic. The results also suggest a reduced need for augmentation with oxytocin. Further research is required. Appropriately powered randomised trials are required to examine the effectiveness of acupuncture on the clinical outcomes described in this review.

The three trials of acupuncture represent different approaches to the use of acupuncture to manage pain during labour. In addition to the style of acupuncture used, acupuncture can vary in the selection of acupuncture points and the needling techniques used (duration of needling, number of points used, depth of needling, type of stimulation and point selection). It is important that any future clinical trials of acupuncture for pain management in labour report the basis for the acupuncture treatment and needling as described in the STRICTA guidelines.[21]

CLINICAL COMMENTARY

Acupuncture may be a helpful therapy for pain management in labour. The efficacy of acupressure has not been established.

IMPLICATIONS FOR RESEARCH

Further randomised, controlled trials of acupuncture and acupressure for pain management in labour are needed. Further randomised trials should be adequately powered and include clinically relevant outcomes such as those described in this review. There is a need for improving the quality and reporting of future trials. In particular, consideration should be given in the analysis and reporting on the person providing the intervention, for example, their training, length of experience

and relationship to the woman. In addition, further research is required which includes data measuring neonatal outcomes and the effects on analgesia requirements in institutions with and without an 'on demand' epidural service. A cost-benefit analysis should be incorporated into the design of future studies. The design of future acupuncture trials should consider the consensus recommendations for optimal treatment, sham controls and blinding.[21]

Acknowledgments

Philippa Middleton is acknowledged for her helpful comments on the draft review.

Sources of support: The University of Adelaide and The Child Health Research Institute, Flinders Medical Centre, South Australia.

Conflicts of interest: nil.

References

1. Melzack R. The myth of painless childbirth. Pain 1984;19(4):321–37.
2. Morgan BM, Bulpitt CJ, Clifton P, Lewis PJ. Analgesia and satisfaction in childbirth (the Queen Charlotte's 1000 mother survey). Lancet 1982;2(8302):808–10.
3. Astin JA, Marie A, Palletier KR, Hansen E, Haskell WL. A review of the incorporation of complementary and alternative medicine by mainstream physicians. Arch Intern Med 1998;158(21):2303–10.
4. Eisenberg DA, Davis RB, Ettner SL, Appel S, Wilky S, Van Rompay M et al. Trends in alternative medicine use in the United States, 1990–1997: results of a follow up national survey. JAMA 1998;280(18):1569–75.
5. Bennett VR, Brown LK. Myles textbook for midwives. 13th ed. London: Churchill Livingstone; 1999.
6. Wall PD, Sweet W. Temporary abolition of pain in man. Science 1967;155(3758):108–9.
7. Pomeranz B, Stux G. Scientific bases of acupuncture. Berlin: Springer-Verlag; 1989.
8. Ng LKY, Katims JJ, Lee MHM. Acupuncture, a neuromodulation technique for pain control. In: Aronoff GM, editor. Evaluation and treatment of chronic pain. 2nd ed. Baltimore, MD: Williams & Wilkins; 1992.
9. Smith CA, Collins CT, Cyna AM, Crowther CA. Complementary and alternative therapies for pain management in labour. Cochrane Database Syst Rev 2006(4).
10. Higgins JPT, Green S, editors. Cochrane handbook for systematic reviews of interventions, version 4.2.5 [Online]. May 2005 [cited 9 Jan 2007]. Available from: www.cochrane.org/resources/handbook.
11. Review Manager (RevMan) [Computer program]. Version 4.2 for Windows. Copenhagen: The Nordic Cochrane Centre, The Cochrane Collaboration; 2003.
12. Li XH, Ma WZ. Effect of electro-acupuncture Shenmen (Otopoint) and Hegu (LI4) on uterine contraction of parturients. Shanghai J Acupunct Moxibustion 1996;15(4):14–15.
13. Shang LF, Liu JY, Li AX. Puncture the Hegu acupoint to accelerate the second stage of labor and to reduce the postpartum hemorrhage. Chin J Nurs 1995;30(9):537–8.
14. Shalev E, Yanay N, Peleg D, Yagudin E. Electroacupuncture during labour and its effect on peripheral plasma beta-endorphin concentration. Am J Acupunct 1991;19(4):345–8.
15. Ternov K, Nilsson M, Löfberg L, Algotsson L, Åkeson J. Acupuncture for pain relief during childbirth. Acupunct Electro-therapeutics Res 1998;23(1):19–26.
16. Chung UL, Hung LC, Kuo SC, Huang CL. Effects of LI4 and BL67 acupressure on labor pain and uterine contractions in the first stage of labour. J Nurs Res 2003;11(4):251–60.
17. Lee MK, Chang SB, Kang D-H. Effects of SP6 acupressure on labor pain and length of delivery time in women during labor. J Altern Complement Med 2004;10(6):959–65.
18. Neisheim BI, Kinge R, Berg B, Alfredsson B, Allgot E, Hove G et al. Acupuncture during labor can reduce the use of meperidine: a controlled clinical study. Clin J Pain 2003;19(3):187–91.
19. Ramnerö A, Hanson U, Kihlgren M. Acupuncture treatment during labour: a randomised, controlled trial. BJOG 2002;109(6):637–44.
20. Skilnand E, Fossen D, Heiberg E. Acupuncture in the management of pain in labor. Acta Obstet Gynecol Scand 2002;81(10):943–8.
21. MacPherson H, White A, Cummings M, Jobst K, Rose K, Niemtzow R. Standards for reporting interventions in controlled trials of acupuncture: the STRICTA group. Complement Ther Med 2001;9(4):246–9.

Thoracic Outlet Syndrome Treated with Acupuncture, Manual Techniques and Self-stretching Exercises: A Case Report

Sherman Gu BMed
Division of Chinese Medicine, School of Health Sciences, RMIT University, Melbourne, Australia

ABSTRACT

A case of thoracic outlet syndrome (TOS) treated with a combination of acupuncture, manual techniques and self-stretching exercises is presented. Brief literature reviews show that there are few documents relevant to TOS and acupuncture. Accumulation of the documented clinical cases will assist with further assessment of the benefits of Chinese medicine for this condition.

KEYWORDS thoracic outlet syndrome, TOS, acupuncture, Chinese medicine.

Introduction

Thoracic outlet obstruction syndrome, or thoracic outlet syndrome (TOS), is also called scalenus anticus syndrome, neurovascular compression syndromes of the shoulder girdle, or cervical rib syndrome.[1] TOS is characterised by pain, numbness, tingling, and/or weakness in the arm and hand due to compression of the brachial plexus and subclavian artery or vein as they pass from the cervical nerve roots to the axilla, through the thoracic outlet, which is constrained by the anterior middle scalene muscles, clavicle, and first rib.[2] It has been suggested that TOS is the most underrated, overlooked, misdiagnosed and important peripheral nerve compression in the upper extremity.[3] TOS is also the most difficult entrapment neuropathy encountered by neurosurgeons.[4] Talmage and Lemke reviewed the history of TOS in 1999.[5] Classifications of TOS are based on the tissues that are compressed in the thoracic outlet. The prevalence of TOS varies from study to study.[5] Diagnosis of the syndrome depends on careful medical history-taking and physical examination.[4] The subclavian artery or vein can be compressed by a spasm of the scalenus anterior and scalenus medius or by an extra cervical rib. An Adson test is used to determine the state of the subclavian vessels.[6] Woods reported that 459 out of 1958 cases (23%) of cervical soft tissue injury were diagnosed as TOS; of these patients, 41% (185 out of 459) failed to respond to conservative therapies.[7] Although there is moderate evidence that acupuncture can relieve chronic pain in neck disorders,[8] over the years, there have been few cases reported in English which record the management of TOS by Traditional Chinese Medicine (TCM).

The TOS case reported here was treated with a combination of acupuncture, manual techniques (*shou fa*, 手法) and self-stretching exercises, with a satisfactory clinical outcome.

The case

CASE HISTORY DESCRIPTION

A 19-year-old male visited a TCM clinic in Melbourne,

* E-mail: shermangu@yahoo.com

Aust J Acupunct Chin Med 2007;2(1):33–5.

Victoria, Australia, on 31 March 2006, complaining of a constant, dull pain in the right neck and shoulder for the previous 30 days.

The man claimed that he had sustained a fracture on the right clavicle three years earlier due to a sport injury. The fractured bone went on to union without proper reduction and there was an anterior angulation deformity of the bone. Since then, he had suffered from dull aching on his right neck and shoulder. He had been treated with physiotherapy with a certain degree of pain relief.

The right neck and shoulder pain had been aggravated 30 days prior to presentation when the patient spent several hours painting walls in the factory where he was employed. The pain was constant, dull, aching, and referred up to the occipital region on the same side. There was neither weakness nor pins and needles in the arm or fingers. Range of motion (ROM) of the shoulder girdle was tested with 90° in flexion, 90° in abduction, 40° in adduction, 45° in extension and 90° in elevation. Muscle strengths of the right deltoid, biceps and triceps were 5 (normal), based on Muscle Gradations. Result of an Adson test was positive on the right side.

DIAGNOSIS

Thoracic outlet syndrome (non-specific type); tendon injuries (*shang jin*, 伤筋) in TCM diagnosis.

TCM DIFFERENTIATION OF SYNDROME

(*Zhong yi bian zheng*, 中医辨证)
Stagnation of Qi and Blood in the muscles, tendons and channels (*qi zhi xue yu*, 气滞血瘀, *jing mai shou zhu*, 筋脉受阻).

TREATMENT OBJECTIVE

Relieve pressure of the brachial plexus by softening the spasm of the scalene muscles.

TCM TREATMENT PRINCIPLE

Invigorate Qi and Blood circulation, unblock the channels and ease the pain (*xing qi huo xue, tong jing zhi tong*, 行气活血, 通经止痛).

TREATMENT

Treatment included acupuncture, manual techniques and self-stretching exercises.

The patient lay on his left lateral side and acupuncture points on the right side were selected. They were GB21 *Jianjing*, LI16 *Jugu*, GB12 *Wangu*, LI14 *Binao* and one Ashi point (阿是穴) on the lower portion of the scalenus anterior and scalenus medius muscles respectively. At each point a 0.25 gauge filiform needle was inserted; the depth of insertion varied from 10 mm to 20 mm based on the thickness of the muscles where the acupoints were located. Needles were retained in the points for 30 minutes with twisting manual stimulations for a few seconds at 10-min intervals in order to further activate Qi movement in the channels.

Gentle manual techniques including circular rubbing (*mo fa*, 摩法), cross-fibre poking (*bo luo*, 拨络), kneading (*rou fa*, 柔法) and rolling (*gun fa,* 滚法), were performed on the affected areas following the acupuncture treatment.

Self-stretching exercises[9] were demonstrated and the patient was instructed to do a 5-min stretching exercise twice per day.

FOLLOW UP AND OUTCOMES

A second visit was made on 4 April 2006. The patient reported that the pain had decreased remarkably. An Adson test produced a negative result. The same treatment modalities, delivered in the same way as at the first consultation, were applied.

Three more sessions of treatment were given on 8 April, 13 April and 24 April 2006 and the patient had no complaint of neck and shoulder pain at the last visit.

Literature Review

Thoracic outlet syndrome (TOS) is common; however, treatment of TOS by acupuncture or other TCM therapies has been rarely discussed in the English literature. The online databases of PubMed, PubMed Central, Acubrief, ProQuest and Cochrane Library were searched for the term 'thoracic outlet syndrome'. The search yielded 4655 items. A further search for 'thoracic outlet syndrome AND acupuncture' resulted in only one article, and its content was not relevant to TOS.

Discussion

The term 'thoracic outlet syndrome' does not exist in TCM; however, the condition may be categorised as 'Tendon injuries (*shang jin*)' or 'Bi-syndrome (痹证)' or 'Flaccidity syndrome (Wei-syndrome 痿证)' based on its clinical manifestations. The general principles of the treatment for tendon injuries or Bi-syndrome are to unblock the channels and collaterals and invigorate Qi and Blood circulation. For the management of TOS, manual techniques, applications of Chinese herbal medicines (externally or orally) and corrective exercises are recommended.[10] In this case, an integration of acupuncture, manual techniques and self-stretching exercises was employed. The selected acupoints were focused on the local affected region, the thoracic outlet and the involved muscles, the scalenus anterior and scalenus medius. The rationale for selecting local acupoints can be traced back to the origin and foundation of TCM theory and practice: the Spiritual Pivot (*Ling Shu*, 灵

枢). It is written that 'the tendon of Hand Taiyang begins from above the little finger . . . and ends at the posterior of the ear Wangu. Heated needling is used, inserting and withdrawing the needle quickly and repeatedly until the pain is relieved; the tender spot serves as the acupoint. This is called Late-summer Bi-syndrome.' ("手太阳之筋，起于小指之上…结于耳后完骨，…治在燔针劫刺，以知为数，以痛为输，名曰仲夏痹也") (Spiritual Pivot Scroll 4, Chapter of Jing Jin, 灵枢 • 经筋). Furthermore, it is written, 'Disorder on the muscles and skin with pain is called muscular Bi. The disorder is due to invasion of cold and dampness pathogens. Multiple and deep puncturing in the major and minor muscles should be given until the patient feels warm.' (病在肌肤，肌肤尽痛，名曰肌痹。伤于寒者，刺大分小分，多发针而深之，以热为故) (Plain Questions Scroll 14, Chapter of comprehensive acupuncture techniques, 素问 • 长刺节论). If TOS is manifested with pain, coldness and numbness at the affected area with history of exposure to cold environment, then Painful-Bi (*Tong Bi*, 痛痹) is diagnosed in TCM; if TOS is associated with oedema of the upper arm, then Fixed-Bi (*Zhao Bi*, 着痹) is diagnosed. If TOS is manifested with atrophy and weakness of the involved muscle, Flaccidity Syndrome (Wei-syndrome) is diagnosed. In this case, the patient had a history of fracture and overuse of the shoulder and arm; therefore the 'Tendon injuries' diagnosis was most fitting with respect to the TCM osteotraumatology diagnostic definition.

In neurological or orthopaedic diagnostic criteria, the condition may be further classified as Type I 'compression of the brachial plexus (neurogenic TOS)'; Type II 'compression of the subclavian artery or vein (vascular TOS)' or Type III 'non-specific or disputed type of TOS'.[4] Type I is mainly pain, pins and needles or weakness and/or atrophy of the brachial plexus innervated muscles, for example, the deltoid. Type II manifests as ischaemia pain and/or coldness, pallor on the involved arm if the subclavian artery is occluded and purple or oedema on the affected arm if the subclavian vein is compressed. Type III TOS is atypical and lacks objective neurological signs. A combination of Type I and Type II is also seen in clinical practice. As the diagnosis of TOS relies foremost on medical history-taking and clinical physical examinations, including orthopaedic special tests, this condition can be easily misdiagnosed. TOS should be differentiated from the disorders in the neck and shoulder regions with pain, such as cervical spondylosis, tears of the rotator cuff, supraspinatus tendonitis, adhesive capsulitis, etc. Positive finding of orthopaedic special tests, such as the Adson test, are important in supporting the diagnosis.

In this case, the patient had a previous history of clavicle fracture with angulation deformity that could narrow the space of the thoracic outlet. Furthermore, during the sustained exertion of painting, the patient over-stretched the pectoralis minor muscle, which could compress the lower brachial plexus. Final assessment is determined by the positive finding of an Adson test. Precise conduction of the Adson test is essential. The examiner should stand behind the patient's involved side, instruct the patient to take a deep breath and rotate the head to the affected side while passively performing the manoeuvres of abduction, external rotation and extension of the involved arm. A positive finding occurs when the examiner detects alteration of strength or absence of the radial pulse in the involved arm when conducting the above manoeuvres. The patient should not hold the breath after rotating the head, as this might induce a pseudo-positive finding of the test. The opposite arm should always be examined, as it may serve as a gauge when performing orthopaedic tests. If it is possible, CT scan, MRI or electromyography should be carried out for differential diagnosis in order to exclude other pathologies with similar clinical pictures.

Conclusion

Thoracic outlet syndrome (TOS) is a clinical condition that is often underrated, overlooked, and misdiagnosed. A combination of acupuncture, manual techniques and self-stretching exercises has shown beneficial outcomes in the treatment of a patient presenting with clinical symptoms and signs consistent with TOS. There are few documents that show the efficacy and safety of TCM modalities for the treatment of TOS. As such, accumulation of the documented clinical cases will assist in the further assessment of the benefits of Chinese medicine for this condition.

References

1. Berkow R, editor. The Merck manual of diagnosis and therapy. 16th ed. Rahway, NJ: Merck & Co.; 1992.
2. McKenzie K, Lin G, Tamir S. Thoracic outlet syndrome. Part I: a clinical review. J Am Chiropr Assoc 2004;41(1):17–24.
3. Sheth RN Belzberg AJ. Diagnosis and treatment of thoracic outlet syndrome. Neurosurg Clin N Am. 2001;12(2):295–309.
4. Huang JH, Zager EL. Thoracic outlet syndrome. Neurosurgery 2004;55(4):897–903.
5. Talmage DM, Lemke C. Thoracic outlet syndrome: how has it changed over the centuries? Top Clin Chiropr 1999;6(4):39–50.
6. Hoppenfeld S. Physical examination of the spine and extremities. San Mateo, CA: Appleton & Lange; 1976.
7. Woods WW. Thoracic outlet syndrome. West J Med 1978;128(1):9–12.
8. Trinh K, Graham N, Gross A, Goldsmith C, Wang E, Cameron I, et al. Acupuncture for neck disorders. Cochrane Database Syst Rev 2006(3).
9. Travell J, Simons D. Myofascial pain and dysfunction: the trigger point manual. Baltimore, MD: Williams & Wilkins; 1983.
10. Wei GK. Zhong Yi Jin Shang Xue [Soft tissue injury in Chinese medicine]. Shanghai: Shanghai Science and Technology Press; 1997.

Current Research and Clinical Applications

Acupuncture for Fibromyalgia

Fibromyalgia (FM) is a musculoskeletal disorder characterised by widespread chronic pain. It affects over 2% of the population and predominantly presents in females. Comorbidities include sleep disturbance, fatigue, irritable bowel syndrome, headaches and mood disorders. The pathophysiology of FM is poorly understood, but is likely to involve dysfunction of the central nervous system.[1] Acupuncture has been frequently sought for this clinical condition. A 2007 systematic review of acupuncture for FM undertaken by Mayhew and Ernst examined five randomised clinical trials (RCT).[2-7] Mayhew and Ernst found that the current evidence of the effect of acupuncture for FM is lacking.[2]

Martin et al.[3] undertook an RCT single-blinded, placebo-controlled trial of 50 FM patients. The results were better in the electroacupuncture (EA) group than those in the control group ($P = 0.01$). The differences remained significant at one-month follow up. Acupuncture not only reduced pain, but also improved fatigue, anxiety and affective distress. The 7-point reduction in the Fibromyalgia Impact Questionnaire (FIQ) is similar to the effect of pharmacological intervention. At the seven-month follow up, the group differences were no longer significant ($P = 0.24$).

In the RCT by Assefi et al.,[4] 100 FM patients were studied and there was no statistically significant difference between the real acupuncture and the pooled sham acupuncture groups.

The RCT by Guo and Jia[5] was an open-label trial involving 66 FM patients. There was no statistical difference between the two EA groups. When compared to the pharmacological intervention group, however, patients in the EA groups were significantly better ($P = 0.01$).

Another RCT by Sprott[6] involved 30 FM patients in a hospital setting. The number of tender points in the patients was reduced from 18.2 to 9.4 in the acupuncture group and from 16.3 to 11.5 in the placebo laser group. The intensity of pain was reduced in the acupuncture group immediately after therapy compared with the other groups. Two months later, the group differences were no longer significant.

An RCT by Deluze et al.[7] had 70 FM patients receiving EA. Pain was reduced by 70% ($P = 0.0027$) in the real acupuncture group, in contrast to 4% reduction in the sham acupuncture group. Sleep also improved in the former but not in the latter group. The improvement of morning stiffness was not different between the two groups.

These five studies differed substantially in the treatment protocols, such as control interventions, acupoint selection, needle depth and stimulation. A summary of the treatment protocol is presented in Table 1. Overall, EA, but not manual acupuncture, was consistently superior to control interventions.

Clinically, the depth of needling and the amount of stimulation have been major points of debate in our profession. Results from the five trials indicate that shallow needling used in sham acupuncture was as effective as traditional acupuncture for FM patients.

Two studies[8,9] not included in the Mayhew and Ernst systematic review examined the impact of needle techniques in FM patients. One study[8] examined the skin and muscle blood flow in healthy volunteers and FM patients. This study found that deep needling, but not shallow needling, in the healthy controls enhanced blood flow, whereas in the FM group both techniques induced similar results. The other study[9] found that correct needle insertion, but not correct needle location or mode of stimulation, was crucial to acupuncture analgesia in FM.

In conclusion, to date we cannot say that there is overwhelmingly good evidence for the treatment of FM using acupuncture. Acupuncture induces strong analgesic effect in FM patients irrespective of the needle techniques, insertion depth, type of stimulation and point selection. The multiple signs and symptoms presented in FM could fit in with Chinese medicine's 'Bi-syndrome'. Chinese medicine's pattern differentiation (*bian zheng*) could be an important step to a better management of FM, however this will require further research.

CLINICAL RELEVANCE

A shallow needle technique may be a better choice in the clinical setting for FM patients. EA with 2 Hz can be used. If

TABLE 1 Acupuncture treatment protocols for fibromyaligia

		Martin et al.[3]	Assefi et al.[4]	Guo & Jia[5]	Sprott[6]	Deluze et al.[7]
Treatment regime	Treatment number	6	24	40	6	6
	Treatment frequency	2–4 days, over 2–3 weeks	2 per week	1 per day, break 4 days after 20	2 per week	2 per week
Needling details	Points used	1st 3 sessions: LI4, ST36, LR2, SP6, PC6, HT7, Proximal BL11, BL12, BL13, BL14. 2nd 3 sessions: LI4, ST36, LR2, SP6, HT7, Proximal BL23, BL25, BL26, BL28.	Alternating, between LI11, SP9, CV12, ST25, KD7, TE5, Ex-HN3, and BL43, BL44, BL17, BL18, BL20, BL22.	[Full-text article unavailable to reviewing author.]	SP2, SP3, DU20, LI4, ST36, KD3, KD7, LI11, SI3, LR2. LR3, GB34 plus extra points (not stated).	LI4, ST36 plus up to 5 other points (not stated).
	Bilateral	Bilateral	Not stated		Not stated	Bilateral
	Depth of needle	Not clear	'Standard'		Not stated	10–25 mm
	Deqi elicited	No	Not stated		Not stated	Muscle twitch
	Needle stimulation	1st 3 sessions: EA, (2 Hz), LI4, ST36; 10 Hz neck pts. 2nd 3 sessions: EA (2 Hz), LI4, ST36; 10 Hz back pts.	Not stated	Dermal electric stimulation and EA	Not stated	EA (frequency not given)
	Needle retention	20 min	30 min		Not stated	Not stated
	Needle gauge	Not stated	34–40 gauge		Not stated	0.3 × 25 mm

utilising formula acupuncture, acupoint selection should include LI4 *Hegu* and ST36 *Zusanli*, as these two are the most commonly used acupoints in the RCTs. A course of three sessions of treatment per week appears to be the best treatment dose, but the length of overall treatment time is not clear. Chinese medicine differentiation could be important.

REFERENCES

1. Wallace DJ, Clauw DJ. Fibromyalgia and other central pain syndromes. Philadelphia: Lippincott Williams & Wilkins; 2005.
2. Mayhew E, Ernst E. Acupuncture for fibromyalgia: a systematic review of randomised clinical trials. Rheumatology (Oxford) 2007;46(5):801–4.
3. Martin DP, Sletten CD, Williams BA, Berger IH. Improvement in fibromyalgia symptoms with acupuncture: results of a randomised control trial. Mayo Clin Proc 2006;81(6):749–57.
4. Assefi NP, Sherman KJ, Jacobsen C, Goldberg J, Smith WR, Buchwald D. A randomised clinical trial of acupuncture compared with sham acupuncture in fibromyalgia. Ann Intern Med 2005;143(1):10–19.
5. Guo X, Jia J. Comparison of therapeutic effects on fibromyalgia syndrome between dermal-neurological electric stimulation and electric acupuncture. Chin J Clin Rehabil 2005;9:171–3.
6. Sprott H. Efficiency of acupuncture in patients with fibromyalgia. Clin Bull Myofascial Ther 1998;3(1):37–43.
7. Deluze C, Lorenzo B, Zirbs A, Chantraine A, Vischer L. Electro-acupuncture in fibromyalgia: results of a control trial. BMJ 1992;305(6864):1249–52.
8. Sandberg M, Lindberg LG, Gerdle B. Peripheral effects of needle stimulation (acupuncture) on skin and muscle blood flow in fibromyalgia. Eur J Pain 2004;8(2):163–71.
9. Harris RE, Tain X, Williams DA, Tain TX, Cupps TR, Petzke F et al. Treatment of fibromyalgia with formula acupuncture: investigation of needle placement, needle stimulation and treatment frequency. J Altern Complement Med 2005;11(4):663–71.

John C Deare

Acupuncture for Osteoarthritis

Witt et al.[1] have recently investigated acupuncture for osteoarthritis of the knee. This is one of five large German studies undertaken by researchers in Berlin and Munich known as the ART studies (Acupuncture Randomized Trials). This positive study evaluated the effect of acupuncture on osteoarthritis of the knee, while the other four studies involved migraine,[2] low back pain,[3] neck pain[4] and tension-type headache.[5]

The study involved 300 subjects randomised to receive either verum acupuncture (n = 150), minimal acupuncture (superficial needling at non-acupoint sites; n = 76) and waiting list (n = 74). The acupuncture treatment was administered by 28 German physicians who were trained (at least 140 hours) and experienced in administering acupuncture. The trial was conducted at 28 outpatient clinics across Germany. Subjects (50–75 years of age) were included in the study if they had documented radiological alterations in the knee joint of grade 2 or more according to Kellgren-Lawrence criteria, and had a documented pain intensity score of 40 or more on a 100 mm visual analogue scale in the seven days before baseline assessment. The main outcome measure was the Western Ontario and McMaster Universities Osteoarthritis Index (WOMAC).

Acupuncture treatment was semi-standardised and the researchers were free to choose from a list of both local and distal acupoints (see Box 1). The acupoints selected were based on their function according to the principles of traditional Chinese medicine. In addition, the acupuncture physicians were also allowed to use trigger points and auricular acupuncture. The physician acupuncturists were allowed to treat unilaterally or bilaterally depending on the presentation of the patient, but only the data for the worst knee was included in the analysis. The elicitation of Deqi was sought in the verum group but not for the minimal acupuncture subjects.

At the completion of the treatment at eight weeks, the patients who received the verum acupuncture had significantly less pain and better function than the patients who received either minimal acupuncture or who were in the wait group. At 26 and 52 weeks, the difference between the verum and the minimal acupuncture was no longer significant.

BOX 1 Acupoints for osteoarthritis

Local acupoints (at least six): ST34, ST35, ST36, SP9, SP10, BL40, KI10, GB33, GB34, LR8, Ex-LE2, Ex-LE5.

Distal acupoints (at least two): SP4, SP5, SP6, ST6, BL20, BL57, BL58, BL60, BL62, KI3.

CLINICAL RELEVANCE

Acupuncture is beneficial for both pain and function in patients with osteoarthritis of the knee. This study confirms the previous Berman clinical trial,[6] which also found significant improvement at the completion of treatment at eight weeks. However, while the Berman study found a significant difference between the minimal and verum groups at 26 weeks, the Witt study did not. Patients should be informed that acupuncture may have to be repeated within six months (26 weeks) to maintain its therapeutic value. Treatment should be directed towards local and distal acupoints and selection of acupoints should be based on Chinese acupuncture theory. In addition, Deqi should be elicited at the acupoints.

CONCLUSION

Acupuncture is an effective short-term treatment for osteoarthritis of the knee. A repeated course of treatment (12 sessions within 8 weeks) every six months is suggested for patients with ongoing knee pain or for those waiting for knee replacement surgery.

REFERENCES

1. Witt C, Brinkhaus B, Jena S, Linde K, Streng A, Wagenpfeil S et al. Acupuncture in patients with osteoarthritis of the knee: a randomised trial. Lancet 2005;366(9480):136–43.
2. Linde K, Streng A, Jürgens S, Hoppe A, Brinkhaus B, Witt C et al. Acupuncture for patients with migraine: a randomised controlled study. JAMA 2005;293(17):2118–25.
3. Brinkhaus B, Witt C, Jena S, Linde K, Streng A, Wagenpfeil S et al. Acupuncture in patients with chronic low back pain: a randomized controlled trial. Arch Intern Med 2006;166(4):450–7.
4. Witt C, Jena S, Brinkhaus B, Liecker B, Wegscheider K, Willich S. Acupuncture for patients with chronic neck pain. Pain 2006;125(1–2):98–106.
5. Melchart D, Streng A, Hoppe A, Brinkhaus B, Witt C, Wagenpfeil S et al. Acupuncture in patients with tension-type headache: randomised controlled trial. BMJ 2005.
6. Berman BM, Lao L, Langenberg P, Lee WL, Gilpin AMK, Hochberg MC. Effectiveness of acupuncture as adjunctive therapy in osteoarthritis of the knee. Ann Intern Med 2004;141(12):901–10.

Chris Zaslawski

Book Reviews

Overcome Neck & Back Pain

Kit Laughlin
Simon & Schuster, 2006 (4th edition)
ISBN 0-7318-1263-8

This new edition of Kit Laughlin's *Overcome Neck & Back Pain* will be welcomed by both patients who suffer from musculoskeletal pain and practitioners who treat such patients. In this fourteen-chapter book, 44 stretching exercises and five strengthening exercises are described in detail and illustrated with photos. These exercises are designed to treat pain in the neck, shoulder, arm, middle back, lower back, hip and the lower extremities.

The book takes a self-help approach and, as a result, the language used is simple, and instructions are easy to follow. Anatomical diagrams are included to explain why one might experience pain. For instance, to explain why shortened piriformis can cause the symptoms of sciatica, four diagrams are presented to illustrate the individual variations of how the sciatic nerve passes through the piriformis.

The updated fourth edition is an improvement on the 1998 edition. Firstly, better photos are used for clarity. Secondly, there is a new chapter explaining the general principles of 'stretching'. Finally, a chapter that explains exercises for pain in the shoulder, arm and hand is added. Overall, it is a better printed and illustrated book.

The author is an athlete and shiatsu practitioner and has taught stretching classes in Australia for more than 15 years. Having himself experienced many injuries, lower back pain and pelvic obliquity, then subsequently restored to normality after shiatsu and stretching exercises, Kit has thought deeply about the Eastern and Western approaches to health and treatment. He has finally come up with a hybrid method in which he utilises the knowledge of anatomy and physiology, Eastern techniques and philosophical approaches (i.e. to simplify the causes and to pursue desired outcomes).

In the introduction, Kit explains what led him to his approach and reports on a few clinical cases. Chapter 1, 'Self-Diagnosis', gives a brief anatomical introduction on the location of major muscles. The author then focuses on explaining how to test pelvic obliquity and illustrates the impact of this obliquity on other parts of the body.

Chapter 2, 'Stretching', explains what constrains our stretches and types of stretches (static and ballistic stretching), then introduces the author's unique method of 'Posture and Flexibility' that incorporates static stretching and contraction–relaxation techniques with breathing and partner-assisted approaches. This chapter lays the groundwork for the general principles of stretching. Here we can see the blend of Western and Eastern methods. Breathing techniques and body awareness are the two essential elements in many Asian exercises, such as Yoga, Tai Chi and Qi Gong. It is appealing to any oriental medicine practitioners to see the use of these two elements in stretching.

Chapters 3–8 detail stretching exercises. Chapters 9 and 10 explain strengthening exercises and relaxation techniques, respectively. Finally, Chapter 11 explains the multiple causes involved in acute and chronic pain.

My criticism of the book is the mechanistic approach to musculoskeletal pain. The author emphasises the impact of tightened muscles and pelvic obliquity on the cause of pain. This understanding is limited. Pain is multi-dimensional and factors such as mental stress and coping strategies are not discussed or mentioned. Furthermore, self-diagnosis can be dangerous when undertaken by a lay audience. Patients who read the book and attend the author's classes might have a better understanding of their problem and could come up with a suitable diagnosis. For many readers, merely reading the book would not help them make a correct diagnosis. It was reassuring to read the author's recommendation that patients discuss their exercises with their practitioners.

Results of two systematic reviews indicate that combined exercise and physical therapy are more effective than either modality alone for neck pain and for ankylosing spondylitis. Effective types and amount of exercise are yet to be studied.

As clinicians who treat musculoskeletal pain patients, we are familiar with incorporating stretching and strengthening exercises in acupuncture, massage and/or herbal medicine to enhance and maintain the effect of treatments. This book provides a systematic and orientally flavoured approach. I highly recommend the book as an exercise manual in the clinic.

Zhen Zheng

Food for the Seasons: Eat Well and Stay Healthy the Traditional Chinese Way

Lun Wong and Kath Knapsey
Red Dog, 2006
ISBN 1-921167-32-7

Bright, informative and well turned out! That is how I described 85-year-old Professor Lun Wong to a friend after I watched him deliver an energetic workshop about Chinese physical arts in Melbourne at AACMAC 2005. A couple of years later, it came as no surprise that Lun Wong's book, *Food for the Seasons: Eat Well and Stay Healthy the Traditional Chinese Way*, co-authored by Kath Knapsey, had me mouthing a similar turn of praise, even before I realised who the author was. Back in 2005, a bit of detective work soon revealed that Lun Wong has a long history of involvement in traditional Chinese arts. Born in 1919, Lun Wong moved to Hong Kong in 1949 and founded the local branch of a traditional Chinese martial art called Wu De Hui. Considered a grand master of this art, he relocated his school to Melbourne in 1974 and went on to found the Academy of Traditional Chinese Medicine Australia in the same year, where he started teaching Wu Da Liao Fa, or the Five Integrated Methods of TCM.

Published in Melbourne in 2006 by a small company called Red Dog Books, *Food for the Seasons* represents the first time Lun Wong has written a book in English. Despite these two potentially dubious facts, *Food for the Seasons* exhibits none of the quirky, if not annoying, qualities often found lurking on pages of books when foreign-language authors publish outside the mainstream. Good editing allows Lun Wong's quintessentially Chinese view to mesh seamlessly with contemporary Australian culture. Whilst, like any other good cook book, it is practical, it also demystifies, what is for many, a confusing and complex concept.

The book is divided into eight well-presented chapters. The first chapter introduces the reader to the basic TCM principles of health, including Yin/Yang theory, the four treasures (Essence, Qi, Shen and Blood), the four pillars (exercise, diet, rest and relaxation), the importance of good digestion and the interconnectedness of the organs and their systems. Chapter two discusses the various energies of food. Here concepts such as the five flavours and the five environmental influences are introduced in a way that allows the reader to quickly grasp the importance of eating in accordance with the seasons. Chapter three is concise and practical, explaining how the tongue is like a personal health chart that can be examined daily to guide choices about what best to eat. By the end of these chapters, it is clear what separates this book from others on the subject. Scattered throughout the text and highlighted in bold print on side panels are numerous theoretical tid-bits. Attributed to Lun Wong or drawn from a rich traditional broth of knowledge, these little gems fuse with the main ingredients of the text to allow the pure and simple elegance of TCM dietetics to rise up, so to say, from the chaff of popular diet fads readers are frequently fed these days. Sixty years of distilled experience bounce out at the reader from almost every page. That said, chapters four through seven are where the fun in this book really begins. Packed full of interesting, easy-to-follow recipes, made to TCM dietetic principles from ingredients that are readily available in Australia, these chapters offer a truly contemporary mix. There is chilli con carne to build Yin and clear heat from the lungs and digestive system. There are vegetarian shish kebabs to strengthen the weak or deficient and French-style green peas to remove damp and heat, while helping with high blood pressure. Of course, there are the more traditional East Asian dishes, such as steamed fish with ginger for vertigo and dizziness and sweet corn soup with crabmeat to open the lungs and settle the heart. Readers will even find liqueurs for indigestion, tonics for tendons and deserts that nurture kidney Yin or remove excess damp. Chapter eight concludes the book and includes a list of all the ingredients used throughout the text, along with a snap-shot of their energetic and general uses for the maintenance of health.

The only gripe I would have, if I had to have one, is this: in an environment where we are constantly blasted by super-slick images in cookbooks by naked chefs, *Food for the Seasons* seems to suffer a little from its lack of glossy photos. At $29.95 it is a cheap purchase for professionals and lay people alike, but for my money, I prefer to see what I'm cooking. That said, *Food for the Seasons* is packed full of goodies, both theoretical and gastronomical. I liked it – I think my patients will too!

Paul McLeod

Conference Report

International Training Course on Application of Modern Scientific Techniques to Cellular Acupuncture Research

Shanghai, China
17 September to 1 October 2006

During September 2006, a two-week international training course – Application of Modern Scientific Techniques to Cellular Acupuncture Research – was conducted in Shanghai, China. The course, the first of its kind, was held at the Shanghai Research Centre for Acupuncture and Meridians, located in Pudong, Shanghai. The course's aim was to develop participants' laboratory research skills and disseminate research findings. Entry to the course was competitive and the course outline and application details were advertised on the Society for Acupuncture Research (USA) website as well as the Shanghai Research Centre website in China. The course was sponsored by a number of institutions including the World Federation of Acupuncture–Moxibustion Societies (WFAS), Chinese Academy of Sciences, Max Planck Society, Pudong Government (Shanghai), Shanghai University of Traditional Chinese Medicine, Fudan University and the Shanghai Research Centre for Acupuncture and Meridians.

The organising committee was international, headed up by Professor Wolfgang Schwarz (Max Planck Institute of Biophysics, Germany), and local organisers, Professor Wang Jianping (Shanghai Municipal Commission for Science and Technology), Professor Ding Guanghong (Director, Shanghai Research Centre for Acupuncture and Meridians) and Professor Li Wemin (Fudan University). Lecturers were also international, including Professors Johannes Greten (Germany), Nancy Midol (University of Nice, France) and Lao Lixing (University of Maryland) and Xia Ying (Yale University) both from the USA. Local lecturers were also involved, including Professors Cao Xiaoding (Fudan University), Fei Lun (Shanghai Research Centre for Acupuncture and Meridians) and Shen Xueyong (Shanghai University of Traditional Chinese Medicine).

As well as the international array of lecturers, the eighteen students enrolled in the course also came from a variety of different countries, including China, USA, Mongolia, Indonesia, Germany and Australia, giving a very international feel to the course.

The two-week course was divided into one week of lectures and presentations and one week of laboratory activities. Presentations formed the basis of the first week with a total of thirty presentation sessions over the week. The course was conducted entirely in English, with time allotted for questions after each session, which allowed for lively discussion. As the course title suggests, the focus was on research associated with elucidating the underlying mechanisms of acupuncture rather than clinical randomised controlled trial (RCT) research.

WEEK 1

Day 1 lectures focused on the evidence of the existence of acupoints and channels. In addition, a lecture on the role of genomics and proteomics and gene expression in asthmatic rats highlighted the novel role needle stimulation can have on the regulation of the whole body.

Day 2 concentrated on cell electrophysiology and the possibility of both acupuncture and moxibustion modulating charge movements across or within the cell membrane. In particular, mast cells, which occur at high density in acupoints, have been suggested to play a key role in that their membranes exhibit mechanically and temperature sensitive channels (P2X receptors) that can be investigated by electrophysiological techniques. The theory of the two-electrode voltage clamp (TEVC) and the patch clamp (PC) were presented to assist the practical sessions using the techniques to follow in the second week. Day 2 finished with a presentation from Dr Xia Ying on the possible protective mechanism of acupuncture from hypoxic/ischaemic brain injury.

Day 3 revolved around research associated with the glutamatergic and GABAergic systems and their role in pain suppression. The importance and involvement of both the GABA and glutamate systems, as a balancing process, were suggested as an important contribution to the effect of pain modulation produced by acupuncture. The next sessions given by Professor Ding, Director of the Shanghai Research Centre for Acupuncture and Meridians, detailed his research into the role of mast cells and tissue fluid

movement as a possible mechanism for acupuncture analgesia. He presented a very novel explanatory mechanism that may partially explain the role of mast cells (which he demonstrated were found in high concentrations in acupoints compared to non-acupoints), and their degranulation during needling, contribute to the acupuncture effect. Day 3 concluded with two sessions from Professor Cao Xiaoding from the WHO Collaborating Centre for Traditional Medicines, Shanghai Medical College of Fudan University. The oldest participant in the course, she reviewed her 1970s research as well as her more current projects on the effect of acupuncture on cell immune function.

Day 4 involved presentations from Professor Midol (France) and Dr Hu (France) on the anthropology of the body and gave some respite from the heavy science of the previous days. In addition, Professor Greten presented on his research involving peripheral blood perfusion as recorded by tissue spectrophotometry. Finally on Day 5, Professor Lao (University of Maryland) presented on the use of animal research models and their role in investigating the effects of acupuncture on pain. Professor Lao, a well-known clinical trial researcher, was also a key-note speaker at a previous Australian acupuncture and Chinese herbal medicine conference (AACMAC 2005). His series of research projects were well developed with specific questions being asked and partially answered with each study, and highlighted the valuable role that animal research could play in addressing the acupuncture mechanism.

WEEK 2

At the start of the second week, all the participants were eager to move into the laboratory and put into play some of the techniques they had been listening to. Laboratory highlights were the sessions involving the patch clamping of frog cells (oocytes), conducted by Dr Rettinger and Professor Schwarz, and the Western Blot (identification of protein chains) sessions. Week 2 also involved visits to Fudan University to demonstrate the concentration of specific elements (Ca, P, K, Fe, Zn) in connective tissue using Proton Induced X-ray Emission (PIXE) and a quick visit to Yue Yang Hospital of Traditional Chinese Medicine. Interspersed over the two weeks were a number of formal dinners as well as informal discussions that contributed to a very informative and rich educational experience. Costs to participants were minimal (US$50) with the aforementioned supporting institutions covering most expenses, including accommodation, food and course costs. The organisers are to be congratulated on organising and conducting such a novel and interesting course.

In retrospect, participants came away with a sense that acupuncture probably has a number of diverse and integrated mechanisms that contribute to the wide variety of effects seen during treatment. The need to complement good clinical research, black-box-type approaches, with specific-mechanism-type research at the cellular level, is essential if acupuncture is to be accepted by Western and scientific researchers.

Chris Zaslawski

International News

Acupuncture in the United States of America

Lixing Lao, PhD, LicAc and Rosa Schnyer, LicAc

In the United States of America, the use of acupuncture was first reported in 1826 by Dr Franklin Bache in a lumbago case.[1] The relatively brief history of acupuncture in the US can be divided into three periods:

1. The Exploratory Period (1826–1971);
2. The Pre-regulation Period (1971–1982), marked by an increase of acupuncture popularity after President Nixon's visit to China in 1972; and
3. The Development and Regulation Period (1982–Present) marked by a growing number of states with acupuncture legislation and acupuncture schools.

Three events are considered as historic milestones in the development of acupuncture in the US. First, in 1976, the Food and Drug Administration (FDA) labelled acupuncture needles as investigational devices (Class III). Devices under such a category cannot be marked unless their effectiveness and safety have been established in clinical trials.

Second, in November 1994, the Office of Alternative Medicine at the National Institutes of Health (NIH) sponsored an NIH-FDA workshop, which led to the FDA reclassifying acupuncture needles as Class II devices in 1996. This reclassification allowed acupuncture needles for general use by registered, licensed or certified practitioners.

Third, in November 1997, the NIH held a Consensus Development Conference on Acupuncture to evaluate its safety and efficacy.[2] The expert panel of the conference recognised the promising results of acupuncture research, and concluded that acupuncture was effective for adult postoperative and chemotherapy nausea and vomiting, and postoperative dental pain, and could be used as an adjunctive therapy for fibromyalgia, myofascial pain, and tennis elbow. The panel suggested future research:

1. To assess the clinical effectiveness of acupuncture;
2. To compare the effects of difference types of acupuncture theory systems, such as Chinese, Japanese, Korean and French styles;
3. To investigate the existence of the energetic system; and
4. To study the impacts on public policies if acupuncture were incorporated into the healthcare system.[2] This consensus report has served as one of the most significant government statements, and has contributed to increased acceptance of acupuncture and Oriental medicine by the biomedical profession in the United States.

During the past ten years, this statement has impacted on government funded research, education and training, clinical usage, and third-party insurance reimbursement for acupuncture services. NIH funding for CAM, including acupuncture research, increased from US$2 million in 1992 to US$121.4 million in 2007. Results of these studies have significantly advanced our knowledge of acupuncture on the clinical evidence, safety and mechanisms of action on various conditions. For example, in 2004, the Center of Integrative Medicine (CIM) at the University of Maryland published a large clinical trial that showed acupuncture was effective and safe for patients with knee osteoarthritis.[3] The Center is now taking the lead in the US to further investigate the effects of Traditional Chinese Medicine (TCM), including Chinese herbal medicine. Since 1997, education in acupuncture and TCM has grown rapidly. Over 50 acupuncture and TCM colleges in the US have been established. Acupuncture clinical services for patient care have also grown. Many hospitals now provide acupuncture services for their patients. Third-party insurance reimbursement has increased. For example, the Federal Blue Cross/Blue Shield insurance, a federal medical insurance agency, started acupuncture coverage for ten treatments in 2006 and increased it to 24 treatments in 2007.

The Society for Acupuncture Research (SAR) is a non-profit organisation founded in 1993. It participated in and assisted the 1997 NIH consensus conference. To reflect on the achievements since the NIH's 1997 report,[2] SAR is sponsoring The Status and Future of Acupuncture Research: 10 years post NIH Consensus Conference, which will be held on 9–11 November 2007 at the University of Maryland, Baltimore, USA. The scientific progress of acupuncture in clinical and

basic research, educational improvement and changes in policies will be presented by national and international speakers. Opportunities and challenges and future directions of acupuncture will also be examined and discussed.

The development of acupuncture in the US has benefited from the support of the profession itself, government funding and the biomedical professions that have become interested in acupuncture. Although the funding is necessary, the capacities of the former are the driving force. With an increased number of well-educated and well-trained acupuncture practitioners and researchers, the profession is maturing and will rely on itself for the future development of acupuncture in the US.

REFERENCES

1. Bache F. Cases illustrative of the remedial effects of acupuncture. North Am Med Surg J 1826;1:311–21.
2. National Institutes of Health. Acupuncture: NIH Consensus Statement Online. 3–5 Nov 1997 [cited 5 May 2007]; 15(5):1–34. Available from: http://odp.od.nih.gov/consensus/cons/107/107_statement.htm.
3. Berman BM, Lao L, Langenberg P, Lee WL, Gilpin AM, Hochberg MC. Effectiveness of acupuncture as adjunctive therapy in osteoarthritis of the knee: a randomized, controlled trial. Ann Intern Med 2004;141(12):901–10.

Upcoming International Conferences

2007

16–20 August	Hong Kong, China **International Conference and Exhibition of the Modernization of Chinese Medicine and Health Products**. For more information, visit www.icmcm.com/fair_dtl/detail.htm
20–22 October	Beijing, China **WFAS 2007 World Congress on Acupuncture**. For more information, visit www.wfas.org.cn
8–11 November	Baltimore, USA **The Status and Future of Acupuncture Research: 10 Years Post-NIH Consensus Conference** For more information, visit www.acupunctureresearch.org
17–19 November	Singapore **The 4th International Congress of Traditional Medicine** (WFCMS) For more information, visit www.4thictm.com/english
2–4 December	Taipei, Taiwan **14th International Congress of Oriental Medicine: The Globalization of Oriental Medicine** For more information, visit http://mail.cmu.edu.tw/~icom

2008

16–18 May	Sydney, Australia **Australasian Acupuncture & Chinese Medicine Annual Conference** For information, contact AACMA on +61 7 3846 5866 or visit www.acupuncture.org.au

Corrigenda

Current Research and Clinical Applications:

A Clinical Snapshot of Acupuncture and IVF

John C Deare and Sean W Scott

The following table accompanies Deare and Scott's 'Clinical Snapshot of Acupuncture and IVF' (AJACM;1(1):41–2). It was mistakenly left out of the issue and apologies are extended to the authors.

TABLE 1 Clinical tips: True acupuncture treatments for IVF

	Smith et al.[1]	Dieterle et al.[2]	Westergaard et al.[3]	Paulus et al.[4]
Treatment	3 sessions: 1st day 9 of stimulating injection; 2nd & 3rd immediately before and after ET.	2 sessions: 1st 30 min after ET and 2nd 3 days later.	2 sessions for group 1 (Acu 1) both before and after ET. 3 sessions for group 2 (Acu 2).	25 min per treatment, both before and after ET.
TCM	As per Maciocia[5]	Acupuncture as per TCM protocol. Not clear if TCM diagnosis was made	As per Paulus et al.[4] and TCM (TCM uncertain).	TCM principles, but not differentiated. As per Maciocia[5]
Needle size	0.18 × 30 mm (bilaterally)	4 cm long (no other details)	Not specified	0.25 × 25 mm
Needle depth	Not specified	15–30 mm	Not specified	10–20 mm (depending on point)
Deqi	Yes	Yes, then rotated again at 15 min	Yes, then rotated again at 10 min	Yes, at start, then 10 min later
Points used	Based on Paulus et al.[4] (excluding LI4 & GV20) • 1st Tx: 6–14 points • 2nd Tx: 13 points • 3rd Tx: 10 points	• 1st Tx: 30 mins > ET; CV4, CV6, ST29, PC6, SP10, SP8 • Ear Points: Using seed; One side only; Shenmen (#55), Zigong (#58), Niefenmi (#22), Pizhixia (#33) • 2nd Tx: 3 days later: L14, SP6, ST36, KI3, LR3 • Plus same ear points on opposite ear • Retained 2 days • Pressed twice daily for 10 min	• Acu 1: Before ET: GV20, ST29, SP8, PC6, LR3; After ET: ST36, SP6 SP10, LI4 • Acu 2: As per Acu 1; 2 days later: GV20, CV3, ST29, SP10 SP6, ST36 LI4	• 1st Tx: Before ET: PC6, SP8, LR3, GV20, ST29; Auricular points: 0.2 × 13 mm; No rotation; Shenmen (#55), Zhigong (#58), Neifenm (#22), Naodian (#34) • 2nd Tx: After ET: ST36, SP6, SP10, L14; • 2 needles in each ear • Ear points changed to opposite sides after ET transfer
Retained	25 min each	30 min each	25 min each	25 min each

References

1. Smith CA, Coyle M, Norman RJ. Influence of acupuncture stimulation on pregnancy rates for women undergoing embryo transfer. Fertil Steril 2006;85(5):1352–8.
2. Dieterle S, Ying G, Hatzmann W, Neuer A. Effect of acupuncture on the outcome of in vitro fertilization and intracytoplasmic sperm injection: a randomized prospective, controlled clinical study. Fertil Steril 2006;85(5):1347–51.
3. Westergaard LG, Mao Q, Krogslund M, Sandrini S, Lenz S, Grinstead J. Acupuncture on the day of embryo transfer significantly improves the reproductive outcome in infertile women: a prospective, randomized trial. Fertil Steril 2006;85(5):1341–6.
4. Paulus WE, Zhang MM, Strehler E, El-Danasouri I, Sterzik K. Influence of acupuncture on the pregnancy rate in patients who undergo assisted reproduction therapy. Fertil Steril 2002;77(4):721–4.
5. Maciocia G. Obstetrics and gynaecology in Chinese medicine. Edinburgh, UK: Churchill Livingstone; 1998.

AJACM Instructions for Authors

The *Australian Journal of Acupuncture and Chinese Medicine* (AJACM) is the official journal of the Australian Acupuncture and Chinese Medicine Association Ltd (AACMA). It is a peer-reviewed journal published biannually and it has an Editorial Board and an International Advisory Board. The Instructions for Authors are available online from: www.acupuncture.org.au/ajacm.cfm.

Aims and scope

AJACM acknowledges the diversity of Chinese medicine theories and practice, and encourages the integration of research, practice and education. It promotes the use of rigorous and appropriate research methodologies in the field of Chinese medicine. AJACM publishes original research articles, general papers, reviews, case reports and case series that will contribute to current practice knowledge and encourage future research directions. The Editorial Board also welcomes the submission of letters, opinions and commentaries.

Authors of randomised, controlled trials (RCTs) are encouraged to consult the CONSORT standards available from www.consort-statement.org/Statement/revisedstatement.htm.

Authors of systematic reviews are encouraged to consult the QUORUM statement: Moher D et al. Improving the quality of reports of meta-analysis of randomised controlled trials: the QUORUM statement. Lancet 1999;354:1896–1900 (Available from www.thelancet.com).

Case reports and case series are to follow the guidelines in Writing Chinese Medicine Case Reports: Guidlines for the Australian Journal of Acupuncture and Chinese Medicine by P Ferrigno, JD Ryan and JC Deare, available from www.acupuncture.org.au/ajacm.cfm.

The reporting of acupuncture treatment in clinical trials, case reports or case series needs to follow STRICTA guidelines, which are available from www.stricta.info/stricta.htm. Similarly, reports of herbal interventions must follow the guidlines outlined in the CONSORT statement, which was reprinted in AJACM (2006) volume 1, issue 1 (pp. 35–9), and is also available from www.annals.org.

All human and animal research must have been conducted in accordance with the National Health & Medical Research Council's standards on research ethics, available from www.nhmrc.gov.au/ethics/index.htm, or equivalent standard if conducted outside Australia. Authors should supply a copy of their ethics approval.

Organisation of manuscripts

GENERAL REQUIREMENTS

AJACM endorses the Uniform Requirements for Manuscripts Submitted to Biomedical Journals, which is available from www.icmje.org/ijmje.pdf.

LENGTH OF MANUSCRIPT

Original research, general articles and reviews should not exceed 3000 words, excluding abstract and reference list, without the permission of the Editorial Board. Case reports and case series should not exceed 1500 words. Letters to the Editor and Book Reviews should not exceed 500 words.

TITLE PAGE

The title page should include contact details of the authors, the manuscript's full title, short title, abstract and keywords. The title page should be included in the same file as the manuscript.

ABSTRACT AND KEYWORDS

Abstracts should not exceed 300 words and, where applicable, contain background, aims, design, subjects and settings, interventions, outcome measures, results, discussion and conclusion. Up to six keywords may be used. Where possible, keywords should be those recommended in the *Index Medicus* Medical Subject Headings (MeSH) list.

TEXT

Manuscripts of original research or review articles should have Introduction, Methods, Results, Discussion, Acknowledgments and References. Authors of other articles should use appropriate headings.

CLINICAL COMMENTARY

All manuscripts should have a Clinical Commentary section, written in plain language for practitioners, describing the

clinical relevance of the article. This section should be 200–300 words in length and will be included in the final article as a break-out box.

ACKNOWLEDGMENTS

Acknowledgments should:

- specify academic and/or technical contributions;
- list the types of financial support; and
- disclose any possible conflicts of interest.

REFERENCES

AJACM adopts the Vancouver referencing system, a summary of which is available from: library.curtin.edu.au/referencing/vancouver.pdf. The Journal encourages the use of citation managers such as EndNote.

In-text citations should use superscript Arabic numerals in the appearing order. The use of footnotes is strongly discouraged. Where there is supplementary comment in relation to a table or a figure, this should be presented below the table using alphabetical symbols.

References should be listed according to the order of their appearance in the text. Please refer to the following referencing examples.

1. WHO. Standard acupuncture nomenclature. 2nd ed. Manila: WHO Regional Office for the Western Pacific; 1993.
2. Cahn A, Carayon P, Hill C, Flamant R. Acupuncture in gastroscopy. Lancet 1978;28(1):182–3.

Abbreviation of journal titles should follow those used in the *Index Medicus*. Please consult the Entrez Journals Database, available from: www.ncbi.nlm.nih.gov/entrez/query.fcgi?db=Journals.

FIGURES AND TABLES

Figures and tables should be numbered according to their order of appearance with Arabic numerals. Figures must be provided as separate files. Information provided in figures and tables should complement, but not duplicate, that in the text. A figure is to have a title and a self-explanatory legend below it. A table is to have a title above it. All symbols and abbreviations must be explained below the body of the table or figure.

Submission of manuscripts

PROCEDURE

All manuscripts should include a cover sheet and be submitted electronically as an e-mail attachment to ajacm@acupuncture.org.au. Authors should also send a hard copy of the manuscript with the signed original of the cover sheet to the Journal's postal address. The Editor-in-Chief will e-mail the correspondent author to confirm receipt of the manuscript and provide a reference number which should be used in all communications about the manuscript.

The Editorial Board will conduct an initial in-house review. The correspondent author will receive in one month of submission an e-mail notifying whether the manuscript:

- has passed the in-house review and has been sent for peer review; or
- has not been accepted through the in-house review.

For articles sent for peer review, AJACM will notify the correspondent author within three months of one of the following four decisions:

- acceptance with no changes;
- acceptance with minor changes;
- acceptance subject to major changes; or
- rejection.

Authors will be given up to two months to amend the manuscript. Once the amended manuscript has been accepted for publication, a galley copy will be sent to the correspondent author for confirmation prior to publication. The Editorial Board expects to receive the confirmation within seven days.

Twenty copies of reprints will be sent to the correspondent author after publication.

FORMAT

Text and tables should be in Microsoft Word 2000 (or later version) format. ASCII, Rich Text Format or PDF files will not be accepted. Manuscripts should be typed, double-spaced with a margin of 20 mm on the top, bottom and both sides. Text should be in Times New Roman 12 point.

Graphics should be in minimum 300 dpi. They are not to be embedded in the text file, and should be submitted as separate files in JPEG or TIFF format.

COVER SHEET

All submissions must include a completed cover sheet, which is available from www.acupuncture.org.au/ajacm.cfm. The cover sheet is a separate document to the title page. This must be submitted as a signed hard copy included with the hard copy of the manuscript. In-house review will not proceed until a cover sheet has been received.

COPYRIGHT AGREEMENT

A completed copyright agreement form should be submitted once the paper has been accepted for publication. The correspondent author is responsible for obtaining the signature of all authors. An assignment of copyright form will be e-

mailed to the correspondent author after the final version of the manuscript has been received and approved for publication.

Terminology and English

Acupuncture points should be named according to both Pinyin and the numerical code recommended by the World Health Organization (WHO. Standard Acupuncture Nomenclature, 2nd ed. Manila: WHO Regional Office for the Western Pacific; 1993).

Chinese herbs should be named according to both the Pinyin and the Latin name. AJACM reserves the right to correct Chinese herb names to conform with the Pharmacopoeia of China (Pharmacopoeia Commission. Pharmacopoeia of the People's Republic of China 2000. English ed. Beijing: Chemical Industry Press; 2000).

The terminology of Chinese medicine, such as Qi, Yin and Yang, should be in Pinyin and may use common English translations where applicable. It is recommended that each manuscript contain a glossary of Chinese medicine terms used.

Chinese characters should be in simplified form and will only be accepted as in-text characters. Downloads for using in-text Chinese characters in Microsoft Word can be obtained from the Microsoft website, www.microsoft.com.

The language used in AJACM is standard Australian English as per the Macquarie Dictionary. Manuscripts will be amended accordingly.

Contact information

All correspondence should be addressed to the AJACM Editor-in-Chief.

E-mail: ajacm@acupuncture.org.au
Phone: +61 7 3324 2599
Fax: +61 7 3394 2399
Post: PO Box 1635
COORPAROO DC QLD 4151
AUSTRALIA

Publication and Subscription Information

The Australian Journal of Acupuncture and Chinese Medicine

Finished size:	297 mm × 210 mm (A4)
Print run:	3500
Frequency:	Biannual
Readership profile:	Practitioners, academics, researchers, theorists and students in the fields of acupuncture, Chinese medicine, biomedicine and Asian studies
Estimated distribution:	Australia 65% Asia–Pacific 25% Other 10%

Subscription Information

AACMA members:	Free (included with annual membership)
Individual subscription:	$50.00 for delivery within Australia
	$75.00 for delivery outside Australia
Institutions (e.g. libraries):	$200.00 for delivery within Australia
	$225.00 for delivery outside Australia

(All prices are in Australian dollars and include postage and taxes.)

Contact for subscriptions:

AACMA
PO Box 1635
COORPAROO QLD 4151
AUSTRALIA

p: +61 7 3324 2599

f: +61 7 3394 2399

e: aacma@acupuncture.org.au

w: www.acupuncture.org.au/ajacm.cfm

Advertising Information

Display advertising (per issue)

All quoted rates are in Australian dollars and include Australian Goods and Services Tax.

Outside back cover (full-colour)	$2500.00	297 mm × 210 mm (depth × width)
Inside front cover (full-colour)	$2200.00	297 mm × 210 mm (depth × width)
Inside back cover (full-colour)	$2000.00	297 mm × 210 mm (depth × width)
Full page (mono)	$1500.00	288 mm × 200 mm (depth × width)
Half page horizontal (mono)	$1000.00	144 mm × 200 mm (depth × width)

Insertion rates (per issue)

$750.00 per sheet

Specifications

Artwork must be in a PC-compatible format (TIFF, JPEG or high-resolution PDF). Please supply artwork via e-mail or CD-ROM, including all images and fonts.
Screen: 300 dpi
Binding: Saddle stitched
Printing: Offset printing

Conditions

Acceptance of any advertising and insertion material is at the sole discretion of AJACM.

AJACM reserves the right to refuse to publish any advertisement or accept any materials for insertion which it feels is in any way inappropriate to the Journal.

Materials must be supplied in the required format and specification. AJACM will not be responsible for the quality or standard of materials supplied in an inaccurate and/or incompatible format and reserves the right to reject any advertising or materials that do not comply with the specifications.

AJACM does not take responsibility for the printing or photocopying of material for insertion. All such materials must be received printed and ready for insertion.

As AJACM is subject to certain restrictions on both size and weight, AJACM reserves the right to refuse to publish or disseminate any advertisement or advertising material which it feels will cause the Journal to exceed these restrictions.

Contact for advertising

For further information on advertising, please contact Jazz Tyrril-Smart, Manager – Marketing, Events and Projects.

p: +61 7 3324 2599 ext. 16
f: +61 7 3394 2399
e: publications@acupuncture.org.au